INSTALLATION GUIDE
AND OWNER'S MANUAL

PolarisSol 1000

Wireless Automated Control System

Table of Contents

1. Introduction
   - 1.1 Important Information and Safety Precautions....2
   - 1.2 FCC Statement....3
   - 1.3 System Overview....4
   - 1.4 Sol Specifications....6
   - 1.5 Accessories....8

2. Installation
   - 2.1Site Assessment....10
   - 2.1.1 Plumbing for a Pool and Spa....12
   - 2.1.2 Plumbing for a Booster Pump Cleaner....14
   - 2.1.3 Plumbing for a Solar System....15
   - 2.1.4 Plumbing for Water Features....16
   - 2.1.5 Equipment Location....16
   - 2.2 S-1000 Command Center Installation....18
   - 2.3 S-1020 Command Center Installation....20
   - 2.4 Filter Pump Wiring (1-Speed)....34
   - 2.5 Filter Pump Wiring (2-Speed)....36
   - 2.6 Pool Light Wiring....38
   - 2.7 Spa Light Wiring....40
   - 2.8 Fiber Optic Lights Wiring....42
   - 2.9 Cleaner Booster Pump Wiring....44
   - 2.10 Heater Wiring....46
   - 2.11 Other Natural Gas and Propane Gas Heater Wiring....50
   - 2.12 Electric Heater and Heat Pump Wiring....52
   - 2.13 Solar System Wiring....54
   - 2.14 Blower Wiring....56
   - 2.15 Jet Pump Wiring....58
   - 2.16 Water Feature Pump Wiring....60
   - 2.17 Suction Valve Installation....62
   - 2.18 Return Valve Installation....64
   - 2.19 Water Feature Valve Installation....66
   - 2.20 Suction Cleaner Valve Installation....68
   - 2.21 Pressure Cleaner Valve Installation....70
   - 2.22 Actuator Valve Adjustments....72
   - 2.23 Temperature Sensor Installation....74
     - 2.23.1 Water Temperature Sensor....75
     - 2.23.2 Air Temperature Sensor Installation....75
     - 2.23.3 Solar Temperature Sensor Installation....75
   - 2.24 Low Voltage Accessory Wiring....76
   - 2.25 Charger Base Installation....78
   - 2.26 Remote Control Battery Installation....80
   - 2.27 Remote Control Battery Charging....82
   - 2.28 Command Center Backup Battery Installation....84

3. Setup
3.1 DIP Switch Settings....86
3.2 Turning on the Command Center....92
3.3 Remote Control Training....96
3.4 Charging Base Training....98
3.5 Antenna Repeater 100

4. Operation
4.1 Command Center Panel Operation....102
4.2 Charger Base Operation....106
Paging the Remote Control....107
4.3 Remote Control Operation....108
Menu Flowchart 118
4.4 Safety Delays and Lockouts....119
4.5 Status Messages....121

5. Programming
5.1 Program Menu....122
5.2 Clock....123
5.3 Auxiliary Labeling 124
5.4 Schedules....126
Sample Schedules....128
5.5 Options 130
5.6 Freeze Protection 132
5.7 User Modes 134

6. Troubleshooting 138

Warranty 145

Important Information and Safety Precautions

1. READ AND FOLLOW ALL INSTRUCTIONS.
2. **WARNING:** Do not allow children to handle this product without close adult supervision.
3. All electrical work must be performed by a licensed electrician and must conform to all national, state and local codes.
4. Do not install or service this equipment if precipitation is present or imminent.
5. Prolonged exposure to water in excess of 100° F will cause hyperthermia. Symptoms can include dizziness, fainting, drowsiness, lethargy, and can result in the impairment of judgment.
6. WARNING -- Risk of Electric Shock. Install all electrical equipment at least 5 feet (1.5m) from inside wall of pool or spa using nonmetallic plumbing. Canadian installations must be at least three meters from the water.
7. Install at least five feet from the inside wall of the pool and spa. Canadian installations must be at least three meters from the water.
8. A ground-fault circuit interrupter must be provided if this device is used to control underwater light fixtures. The conductors on the load side of the ground-fault circuit interrupter shall not occupy conduits, boxes or enclosures containing other conductors unless the additional conductors are also protected by a ground-fault circuit interrupter. GFCIs and GFCBs should be tested daily before using the pool or spa. Refer to local codes for complete details.
9. A terminal bar marked GROUND is provided within the command center. To reduce the risk of electrical shock, connect the terminal bar to the grounding terminal of your electrical service or supply panel with a continuous green insulated copper wire equivalent in size to the circuit conductors supplying this equipment, but no smaller than 12 AWG (3.3 mm^2). In addition, a second wire connector should be bonded with a minimum 8 AWG (4.115 mm) copper wire to any metal ladders, water pipes, or other metal within 5 feet (1.52 m) of the pool or spa.
10. Always keep the door to the command center closed.
11. The Sol hand-held remote must have a fully charged battery before it is used. Charge the battery at least 12 hours on the charging base before use or battery will be permanently damaged and will need to be replaced (part #12-2038).

11. SAVE THESE INSTRUCTIONS.

FCC Statement

This equipment has been tested and complies with the limits for a Class B digital device, pursuant to Part 15 of the FCC rules. These limits are designed to provide reasonable protection against harmful interference in a residential installation. This equipment generates, uses and can radiate radio frequency energy, and if not installed and used in accordance with the instructions, may cause harmful interference to radio communications. However, there is no guarantee that interference will not occur in a particular installation. If this equipment does cause harmful interference to radio and television reception, which can be determined by turning the equipment off and on, the user is encouraged to try to correct the interference by one or more of the following measures:

- Reorient or relocate the receiving antenna.
- Increase the separation between the equipment and the receiver.
- Connect the equipment into an outlet on a different circuit from the one to which the receiver is connected.

This equipment has been certified to comply with the limits of a Class B computing device, pursuant to FCC rules. In order to maintain compliance with FCC regulations, shielded cables must be used with this equipment. Operation with non-approved equipment or unshielded cables is likely to result in interference with radio and television reception. The user is cautioned that changes and modifications made to this equipment without the approval of the manufacturer could void the user's authority to operate this equipment.

FCC ID: PFU-12-200X

This device complies with Part 15 of the FCC rules. Operation is subject to the following two conditions:

1) This device may not cause harmful interference, and

2) This device must accept any interference received, including interference that may cause undesired operation.

This Class B digital apparatus meets all requirements of the Canadian Interference-Causing Equipment Regulations.

1.3 System Overview

Command Center available with or without subpanel

1.3 System Overview

The Polaris Sol 1000 is easy to install in new or existing pools without drilling through walls or patios. The Sol controller receives signals from the command center that enables it to activate or deactivate many features associated with outdoor environments. Step by step menus make it simple to schedule regular routines such as cleaning or lighting.

The Polaris Sol 1000 complete system includes a streamlined remote controller designed for comfortable two-handed operation, a charging base, (freestanding or wall mountable), a command center, two motorized valve actuators and two temperature sensors. The remote and charging base are designed with no wiring requirements to enable exceptional mobility.

Remote Control features:
- Lightweight, hand-held remote
- Water resistant
- Large, easy to read screen
- Eliminates additional wiring for spa-side control
- Backlight for operation in low light
- Programs in minutes
- Long-life rechargeable battery
- Paging feature for lost remote
- Truly wireless installation

Controls most pool and spa equipment
- Circulation pump
- Two-speed pumps
- Automatic pool cleaner pumps
- Water feature pumps
- Spa blowers and jet pumps
- Gas and propane heaters
- Solar heaters
- Electric lights
- Fiber optic lights
- Low-voltage lights

Controls valves for:
- Circulation for pool/spa combination
- Spa drain, fill and spillover
- Solar panels
- Automatic pool cleaners

The Polaris Sol 1000 is a wireless automation system that provides convenience and flexibility in controlling outdoor equipment through timed programming or direct input from the wireless remote. These instructions will detail the installation and wiring of the command center. Detailed programming instructions for the wireless remote are packaged in the remote box.

1.4 Sol Specifications

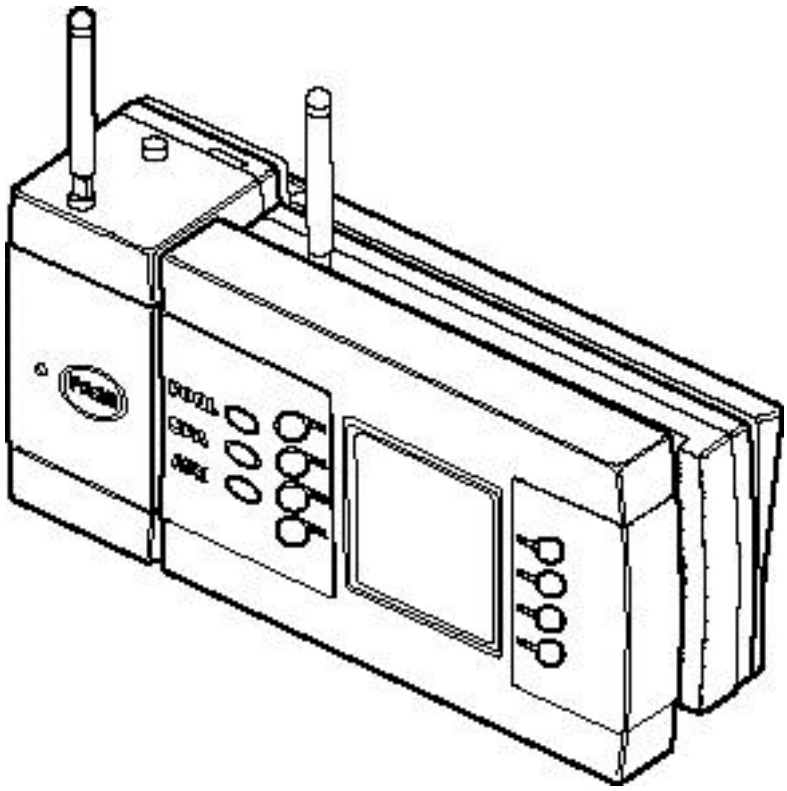

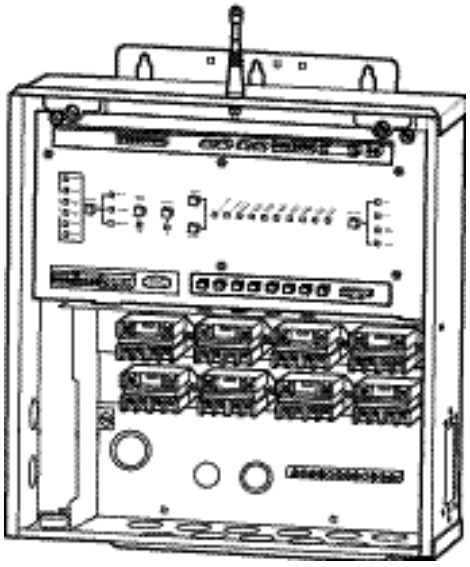

S1020
Command Center
without subpanel
4 Standard Relays Included
4 Optional Relays

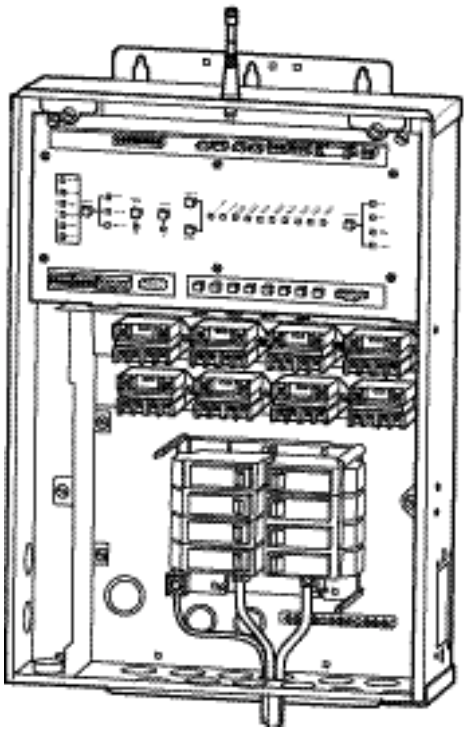

S1000
Command Center
with subpanel
4 Standard Relays Included
4 Optional Relays

Dimensions:

Command Center with Subpanel: 15.5" W x 21.75" H x 4.5"D
Accommodates up to 8 single position or 4 double position circuit breakers

Command Center without Subpanel: 15.5" W x 16.75" H x 4.5" D

Charging Base: 10.5" W x 5" H x 2.75" D

Wireless Remote: 8" W x 5" H x 1.75" D

Specifications:

Power Supply: (Input) 50/60 Hz, 120/240 VAC; 1 AMP/0.5 AMP;
Output - 24 VAC, 3 AMP.

Contact Rating (high voltage): 25 AMPs, 3 HP @240 VAC,
1.5 HP @ 120 VAC.

Contact Rating (low voltage): 8 AMPs @ 120 VAC.

Emergency Service Switches: All circuits.

Suitable Listed Breakers						Wiring Information - COPPER Conductors					
Manufacturer	Circuit Breaker				Filler Plate	Minimum Wire Size and Temperature (AWG - Deg C)	Max. Current Capacity (AMPs)	Circuit Breaker Rating* (AMPs)	Max. Motor Load, 75C Insulation		Terminal Tightening Torques
	STD	TWIN	QUAD	GFCB					120V	240V	
Crouse-Hinds	MP	MH	–	MP115GF	FP-1C	14-60	15	15	1/2 HP	2 HP	20 lb-in
Outer-Hammer	BR	BD	BQ	GFGB	FP-1	14-60	20	20	1-1/2 HP	3 HP	20 lb-in
General Electric	THQL	–	–	THQLGF	THPP	12-60	30	30	–	–	20 lb-in
Siemens/ITE	QP	QT	Q2	–	QF-3	8-60/75	40-60	40-60	–	–	25 lb-in
Square D	HQM	HQMT	–	HQM-GFI	FP	6-60/75	55-65	55-60	–	–	35 lb-in
Thomas & Betts	TB	TBBD	TBBQ	BFB	FP	4-60/75	70-85	–	–	–	40 lb-in
						3-60/75	85-100	–	–	–	50 lb-in

Command Center Components

- Command Center
- Mounting Brackets
- Circuit Board
- External Antenna
- Antenna O-ring
- Label Set for Custom Auxiliary Identification
- Back-up Battery
- Four high voltage relays

Wireless Remote Components

- Remote
- Charging Base and Table Base
- Two Temperature Sensors
- Two Motorized Valve Actuators
- Installation Guide/Owner’s Manual
- Transformer for Charging Base
- Remote Battery
- Battery Cover
- Battery Cover O-ring
- Screws (to secure battery cover)
- Quick Reference Card

1.5 Accessories

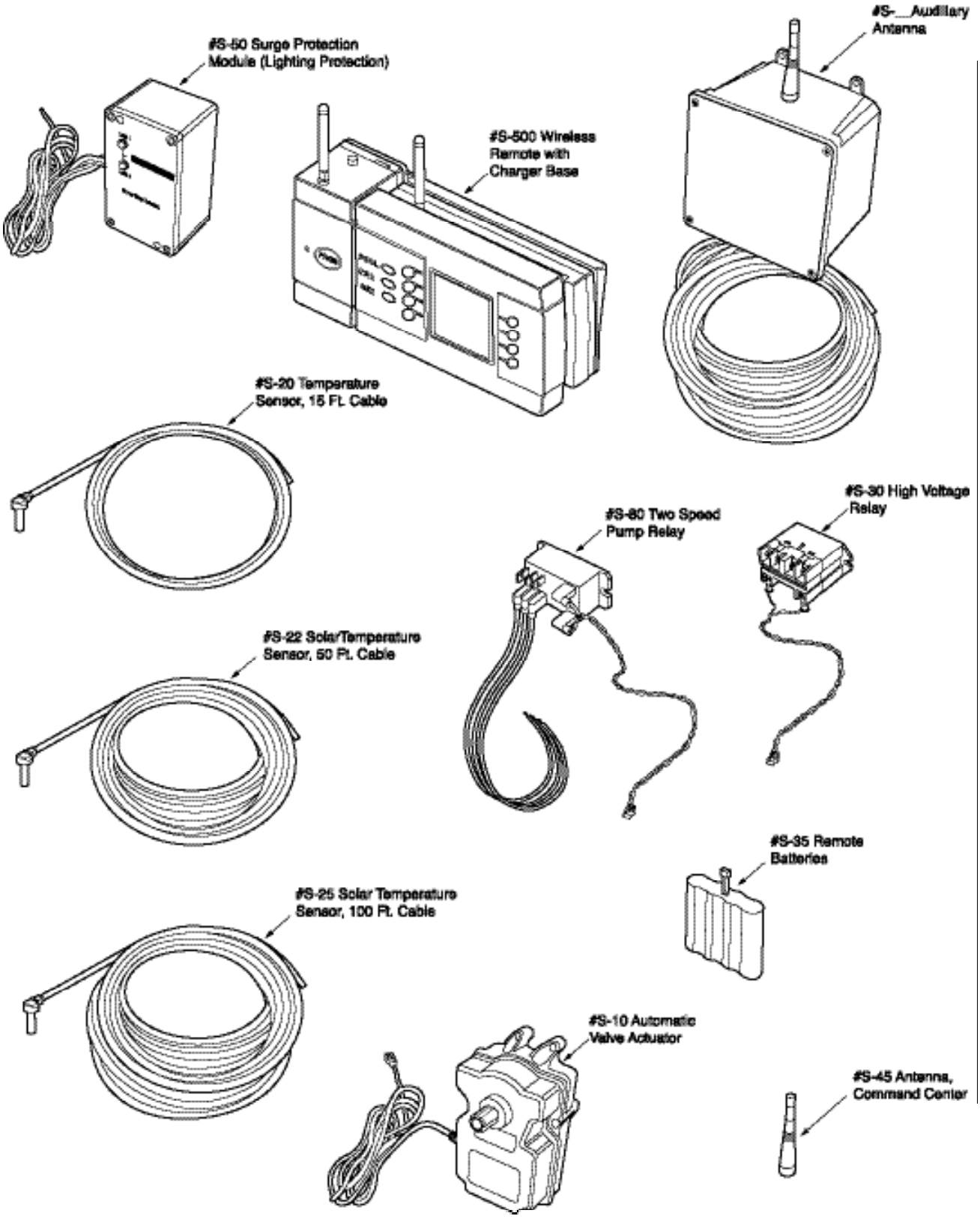

1.5 Accessories

Accessories (Also Available But Sold Separately)

- Part #S10 - Automatic Valve Actuator
- Part #S20 - Temp Sensor, 15 Ft. Cable
- Part #S22 - Solar Temp Sensor, 50 Ft. Cable
- Part #S25 - Solar Temp Sensor, 100 Ft. Cable
- Part #S30 - High Voltage Relay
- Part #S35 - Remote Batteries
- Part #S42 - Antenna Repeater
- Part #S45 - Antenna, Command Center
- Part #S50 - Surge Protection Module (Lightning Protection)
- Part #S80 - Two Speed Pump Relay
- Part #S500 - Wireless Remote with Charging Base

Note: Circuit breakers, Ground-Fault Circuit Interrupters, and three-way valves are sold separately.

2.1 Site Assessment

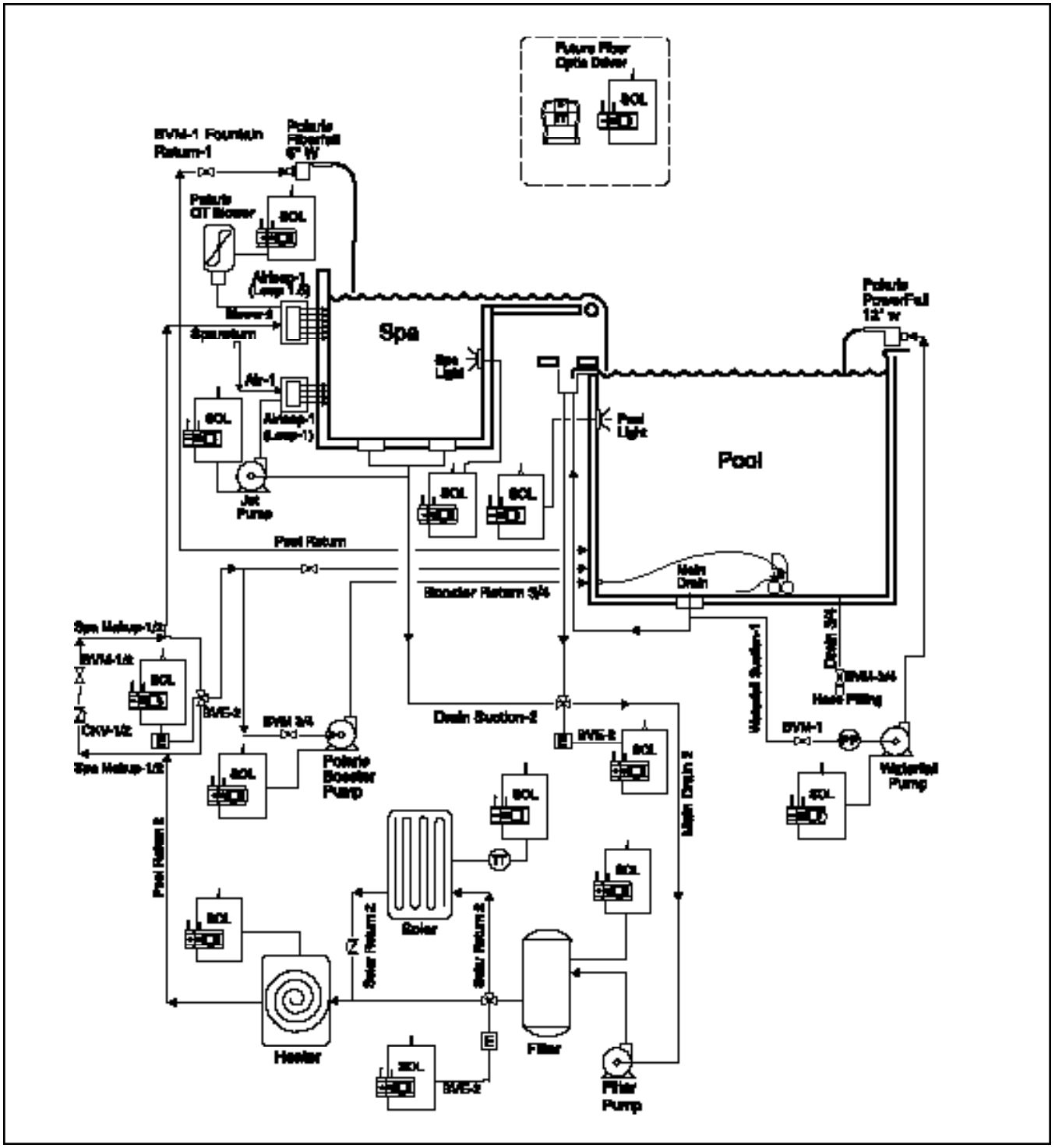

2.1 Site Assessment

This checklist ensures you have everything you need for installation.

1. Decide if you need a subpanel with breakers or is each piece of equipment already protected by a breaker.

   Command Center with subpanel – order Polaris P/N S-1000

   Command Center without subpanel – order Polaris P/N S-1020

2. Decide what the unit will control from this list?

Equipment	Yes?	Relays Required	Valve Actuators Required
Filter Pump – 1 Speed	☐	1	-
Filter Pump – 2 Speed	☐	2 (1 for low, 1 for high)	-
Pool/Spa Combination	☐	-	2 (1 for suction, 1 for return)
Cleaner Booster Pump	☐	1	-
Pressure Side Cleaner Controlled with automatic valve	☐	-	1
Spa Blower	☐	1	-
Spa Jet Pump	☐	1	-
Water Feature Using Separate Pump	☐	1 Each	-
Water Feature Using A Valve	☐	-	1 Each
Pool Light	☐	1	-
Spa Light	☐	1	-
Fiber Optic Lighting	☐	1 For on/off control only 2 For on/off plus color wheel control	- -
Heater (Gas or Propane)	☐	0 Use heater connection	-
Heater (Electric)	☐	0 If thermostat is low voltage 1 If thermostat is high voltage	
Solar Using booster pump	☐	1	-
High-voltage accessory	☐	1 Each	-
Low-voltage accessory Landscape lights, etc.	☐	0 Use low-voltage connection	-
		____ Total (8 maximum)	_____ Total (4 maximum)
		4 relays included	2 valve actuators included

2.1.1 Plumbing for a Pool and Spa

Plumbing for a Pool and Spa Combination

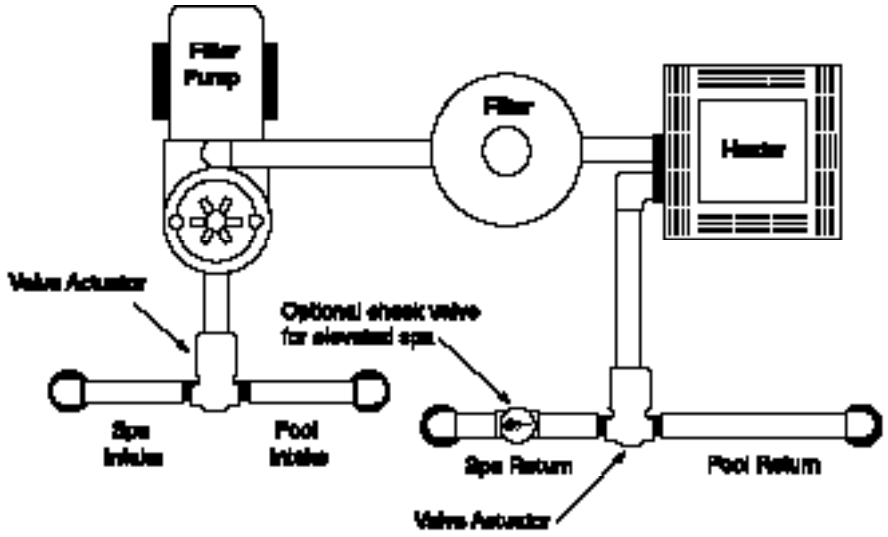

Plumbing for Non-Booster Pump Pressure-Side Pool Cleaner

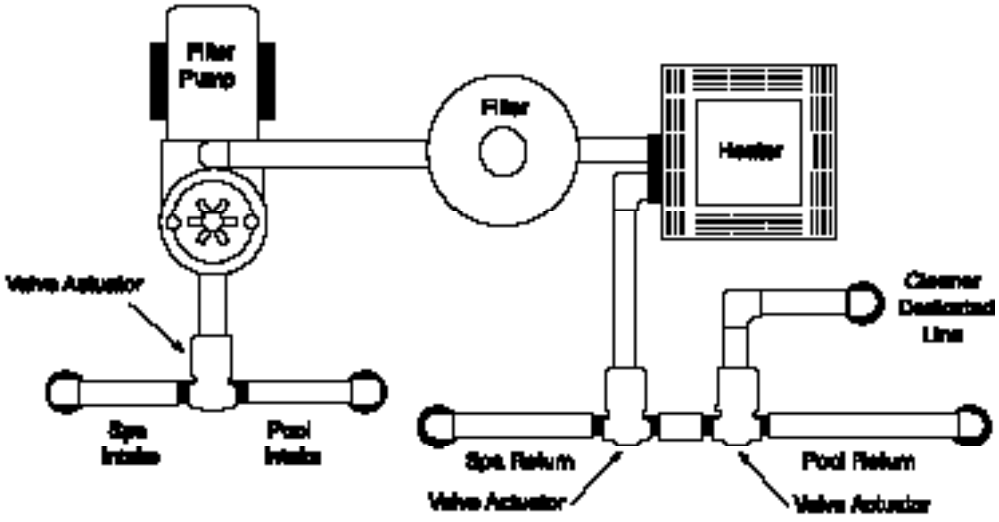

Plumbing for a Pool and Spa Combination

- Plumb the pool system in accordance with the standard configuration of a pool and spa that share the same filter pump, filter and heater. The suction and return actuators will turn at the same time so when the spa button is selected, the water circulation will switch between the pool and spa.
- Position the spa at or above the level of the pool. If the spa is attached to the pool, an overflow dam must be provided between the two bodies of water. If the spa is not attached to the pool, an equalizer line that can carry full pump-flow must be installed between the spa and pool.
- Plumb a check valve on the spa return line if the pool/spa combination has an elevated spa.
- Plumb a 3-port valve on the suction side of the pool filter pump so the center valve port is connected to the filter pump. Connect the spa suction to one port and the pool suction to the other port.
- Plumb a 3-port valve on the heater output side so the center valve port is connected downstream of the heater. Connect the spa return to one port and the pool return to the other port.

Plumbing for a Non-Booster Pump Cleaner

- Plumb a 3-port valve on the pool return line after the spa and pool return valve. Connect the pool return to one port and the cleaner dedicated line to the other port.

2.1.2 Plumbing for a Booster Pump Cleaner

Booster Pump Pool Cleaner Plumbing

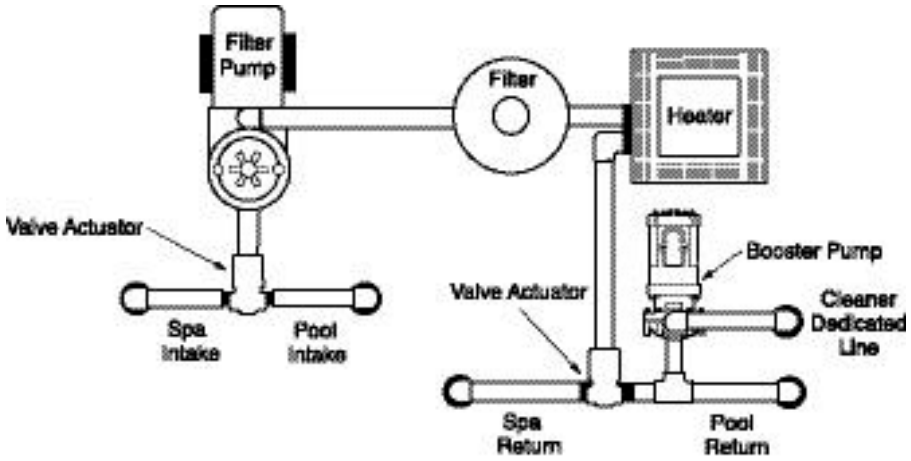

Solar System Plumbing

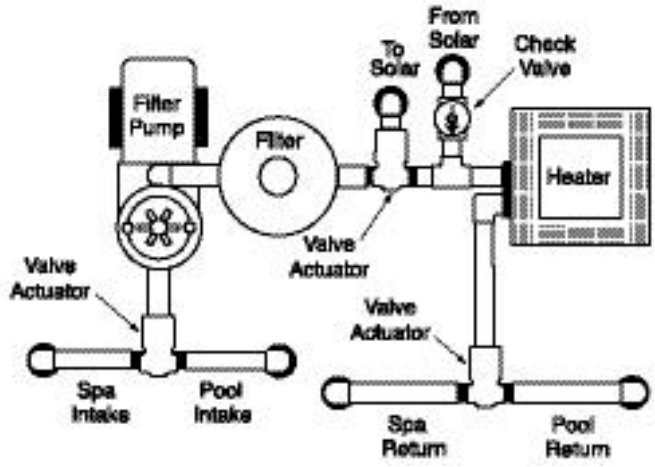

2.1.2 Plumbing for a Booster Pump Cleaner

Plumb the booster pump so the suction side is connected downstream of the heater and 3-port valve on the pool return side, as near to the ground as possible.

2.1.3 Plumbing for a Solar System

- Plumb the solar feed and return lines before the heater. Install a 3-port solar valve and actuator at the feed line.
- Glazed solar panels require a drain valve to allow draining of panels. This prevents damage from overheating water. Install a drain valve at the solar feed line and connect it to the pool fill line.
- A solar temperature sensor (50 ft or 100 ft) will be needed. The sensor should be mounted on or near the solar panels and connect to the command center with the wire provided. **Note:** Verify that DIP Switches 4 and 5 are set to the appropriate settings. See page 89 .

2.1.4 Plumbing for Water Features

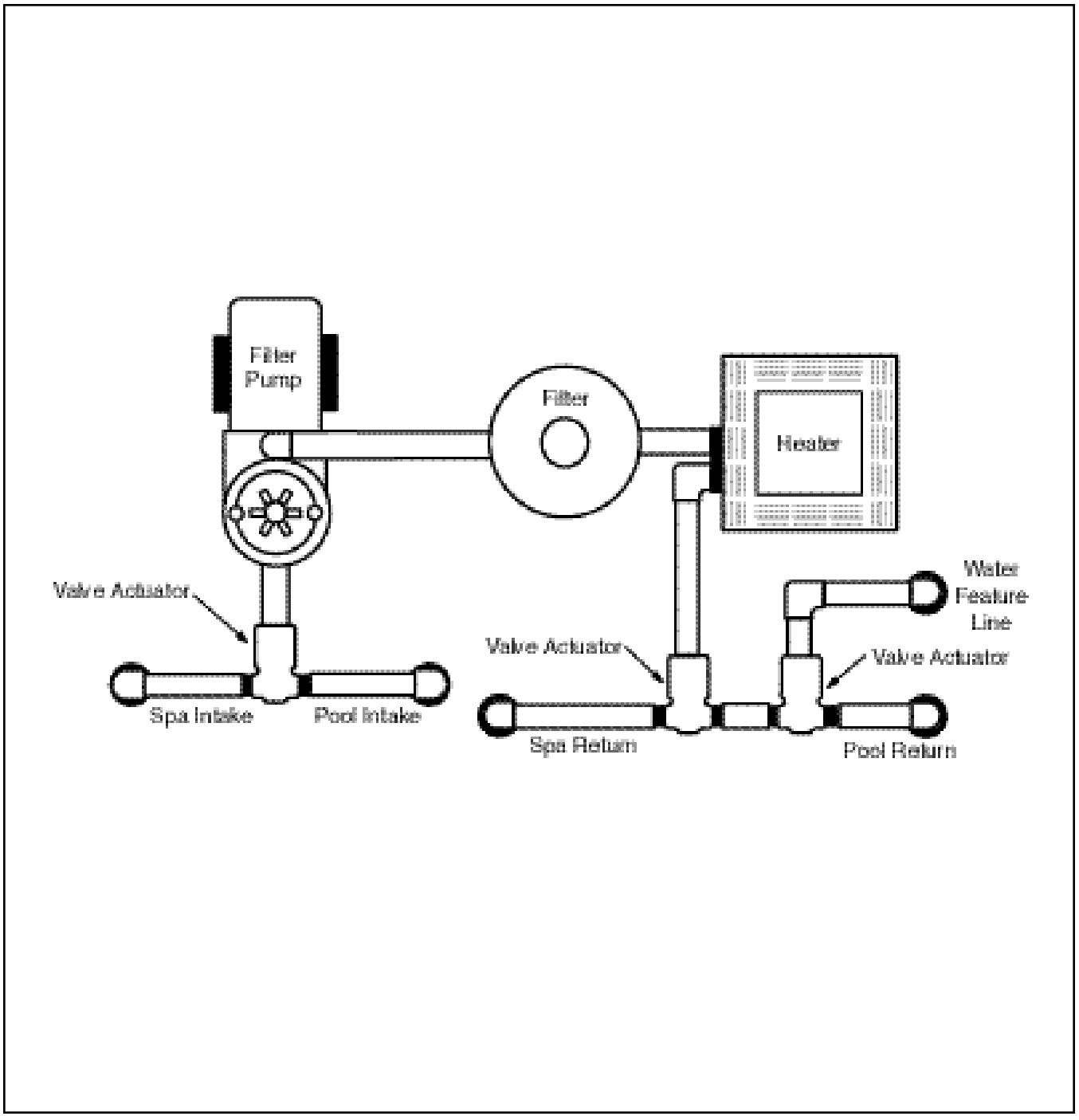

Plumbing for Water Features

- Using a 3-port valve and actuator could eliminate the need for a separate pump.
- Use a separate pump if the water feature has its own suction supply and requires a large volume of water.
- If the water feature shares plumbing with other equipment and requires a booster pump, install a 3-port valve and actuator. See Section 2.20 for instructions on how the Sol can automatically open and close the actuator during pool/spa operation.

  NOTE: An additional pump can be used if the water feature (e.g. waterfall) is running from a dedicated suction line, and will only circulate the pool water to the water feature.

  NOTE: A separate booster pump can also be used if additional water flow is needed. One auxiliary output would be used for the valve actuator and another for the pump. As these two components cannot be linked, select the water feature you wish to activate prior to turning the pump on.

2.2 S-1000 Command Center Installation

S-1000 Command Center With Sub Panel

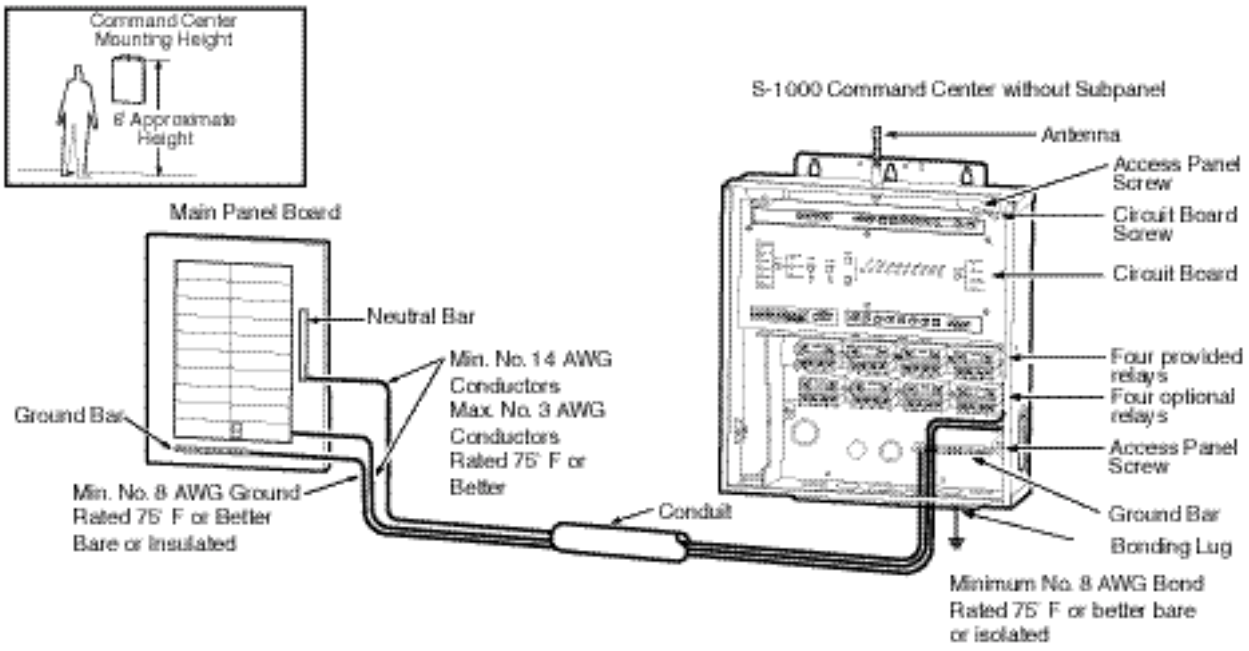

IMPORTANT: Do not turn on electrical power until all high voltage and low voltage connections have been made. Failure to follow this precaution can result in permanent damage to the command center, transformer or circuit board.

1. Mount the command center with the mounting brackets provided, no less than 5 feet from the pool or spa. It is recommended that the enclosure be mounted so the circuit board (see figure below) is nearly eye level. The radio communication is more reliable with the antenna at a higher position.

   Power Supply Ratings: 120/240 VAC up to three conductors plus ground, 50/60 Hz.

   Note: All electrical equipment must be five feet or more from the pool/spa and comply with all national, state and local codes.

   a. If the Polaris command center does not have an electrical subpanel, install an electrical supply panel with separate breakers for each load.

   b. Ensure that equipment motors have built-in thermal protection.

   c. Use the ground bar mounted in the command center for equipment grounding.

   d. Bond all equipment, including the command center, if necessary, to a solid ground connection.

   e. CAUTION: Adequate drainage must be provided if the pool equipment is to be installed in a pit.

   f. In areas where lightning strikes are common, install an external surge suppression device (part number 5-50 available separately) for both high and low voltage lines.

   g. If this enclosure is used for direct connection of underwater lights, a Ground Fault Circuit Breaker (GFCB) or Ground Fault Circuit Interrupter (GFCI) must be used. A rectangular knockout on the side of the enclosure may be used to mount an **APPROVED** wiring device for this purpose. If the unit is being installed outdoors, then an **APPROVED** rain cover must be installed over the wiring device in the side knockout. Refer to NEC 680-21 (b) or CEC 687-060, 062, and 066 for further details.

   h. Each command center enclosure comes standard with four high voltage relays. If additional relays are required based on the specific installation, then they must be purchased separately (part number S-30). Additional relays are installed below the factory installed relays. Simply remove two mounting screws in the location where the new relay will be installed, position the relay and secure using the screws just removed.

2.2 S-1000 Command Center Installation

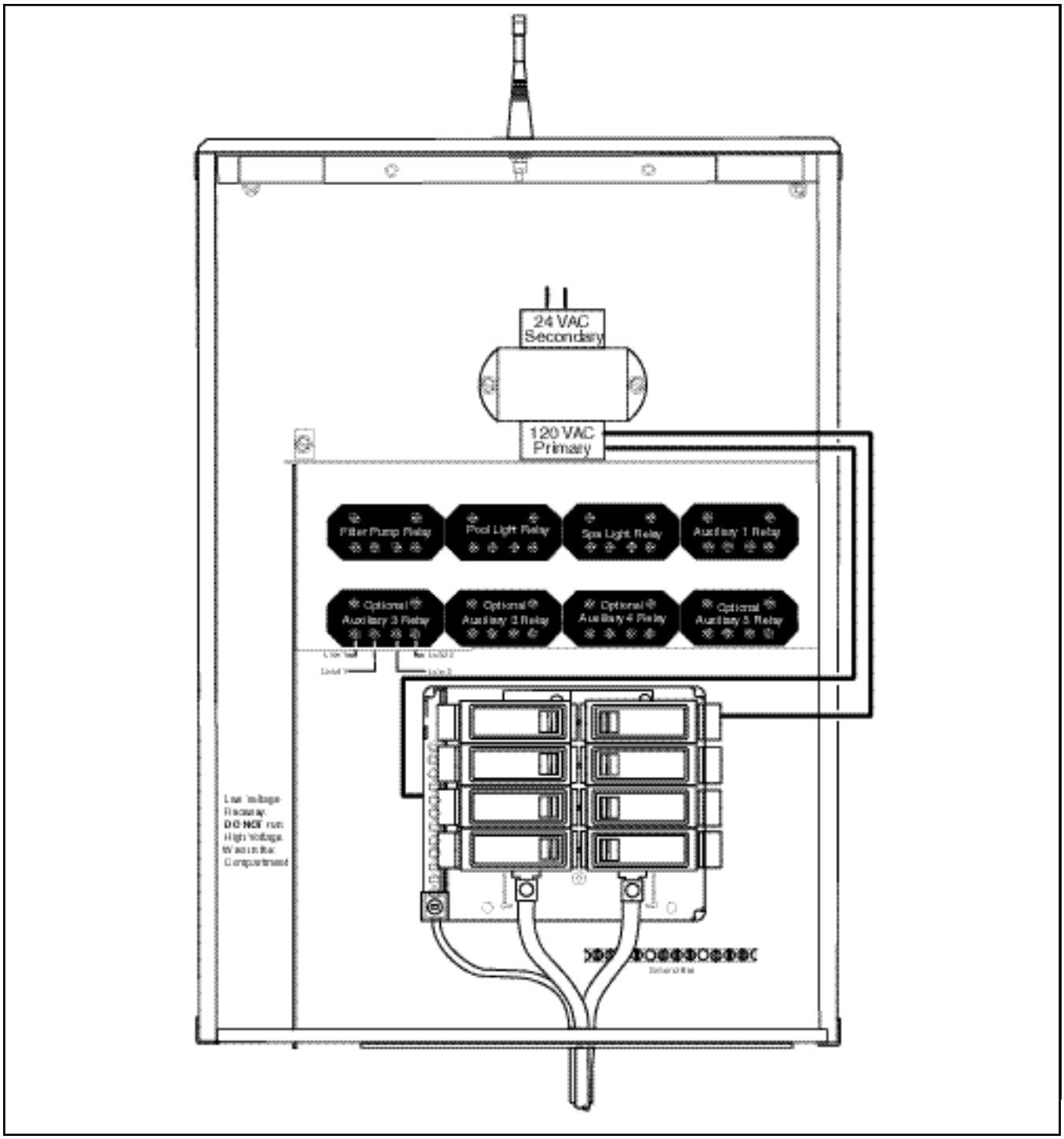

1. A wire connector is provided on this unit to connect a minimum No. 8 AWG (8.4 mm^2) solid copper conductor between this unit and any metal equipment, metal enclosures of electrical equipment, metal water pipe, or conduit within 5 feet (1.5m) of the unit.

   Feeder wires shall be No. 14 to No. 3 AWG copper rated for 75°F or better.

2. Open the command center door. Remove the panel screws and the access panel to gain access to the electrical components. Run the conduit or wire from the power supply panel to the command center.

   Note: The number of pieces of equipment to be controlled will dictate the size of conduit needed.

   a. If the command center has a subpanel, wire power to the appropriate breakers. (Breakers sold separately. See table on warning label for approved breakers).

Suitable Listed Breakers						Wiring Information - COPPER Conductors					
Manufacturer	Circuit Breaker				Filler Plate	Minimum Wire Size and Temperature (AWG - Deg C)	Max. Current Capacity (AMPs)	Circuit Breaker Rating* (AMPs)	Max. Motor Load, 75C Installation		Terminal Tightening Torques
	STD	TWIN	QUAD	DFCB					120V	240V	
Crouse-Hinds	MP	MH	–	MP1150F	FP-1C	14-60	15	15	1/2 HP	2 HP	20 lb-in
Quinn-Hammer	BR	BQ	BQ	BFCB	FP-1	14-60	20	20	1-1/2 HP	3 HP	20 lb-in
General Electric	THQL	–	–	THQLDF	THFP	12-60	30	30	–	–	50 lb-in
Siemens/ITE	QP	QT	QB	–	QF-S	6-60/75	40-60	40-60	–	–	35 lb-in
Square D	HOM	HOMT	–	HOM-DFI	FP	6-60/75	65-85	65-80	–	–	35 lb-in
Thomas & Betts	TB	TBED	TBEQ	BFB	FP	4-60/75	70-95	–	–	–	45 lb-in
						3-60/75	85-100	–	–	–	50 lb-in

   b. Pull wire sized appropriately for each piece of equipment from the equipment to the enclosure.

   c. Each piece of equipment requires its own high voltage relay. If one relay is to be used for several pieces of equipment, verify that the total current draw of all equipment does not exceed the current rating of the circuit.

   d. Connect the 120 wires to the transformer wires.

   e. Connect the equipment grounds.

   f. A green colored terminal or a terminal marked G, GR, Ground, Grounding, or ⏚ is located inside the supply terminal box or compartment. To reduce the risk of electric shock, this terminal must be connected to the ground means in the electric supply service panel with a continuous copper No. 8 AWG bare, covered or insulated wire per NEC Article 250-122.

   g. A bonding lug is provided on the external surface of the supply terminal box or compartment. To reduce the risk of electric shock, connect the local common bonding grid in the area of the pool or spa to this terminal with an insulated or bare copper conductor not smaller than No. 6 AWG.

2.2 S-1000 Command Center Installation

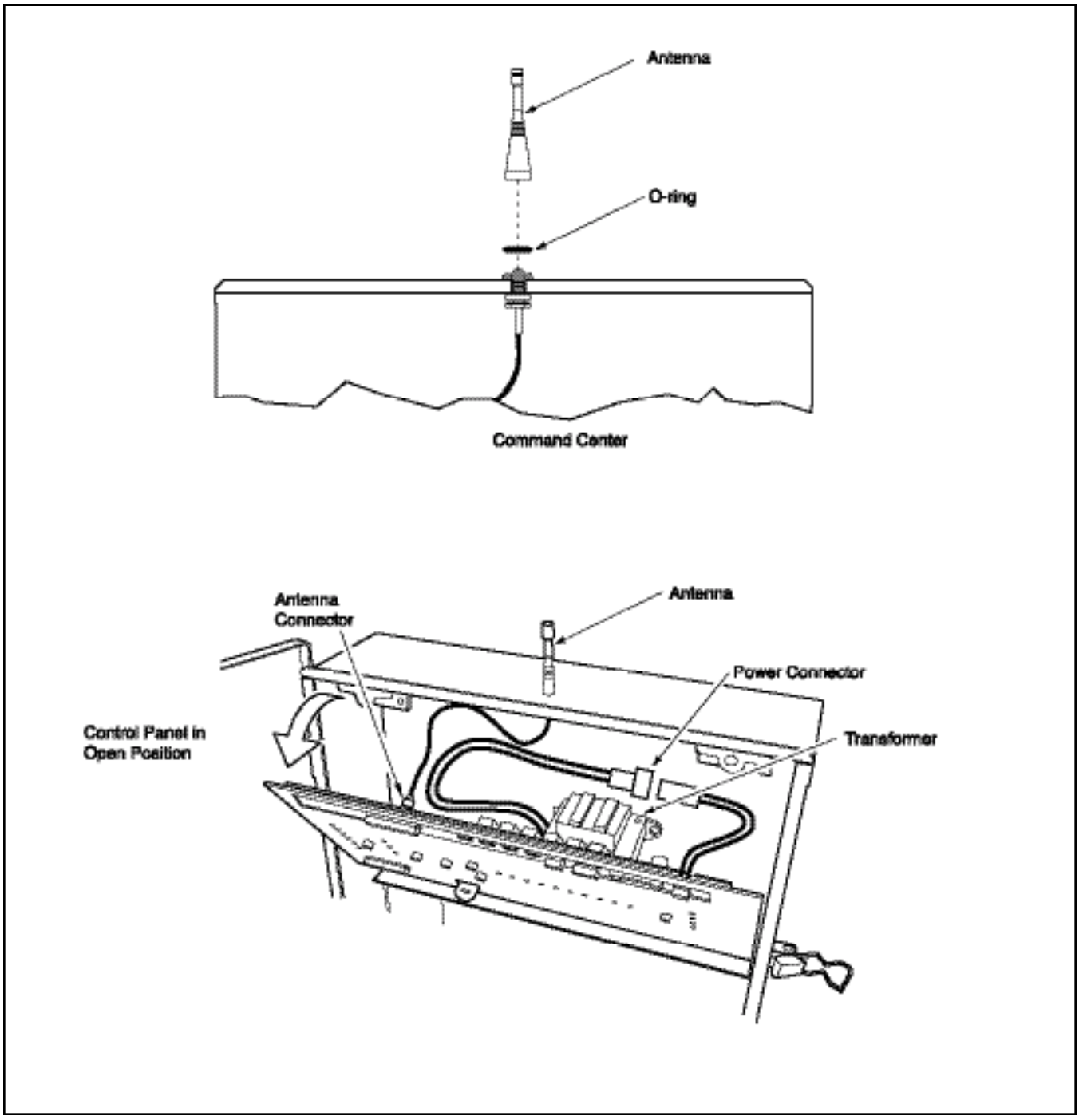

h. All field-installed metal components such as rails, ladders, drains, or other similar hardware located within 3m of the pool or spa must be bonded together and to the equipment bonding lug with copper conductors not smaller than No. 6 AWG.

3. Wire the relay of the equipment being used, installing additional relays when necessary.

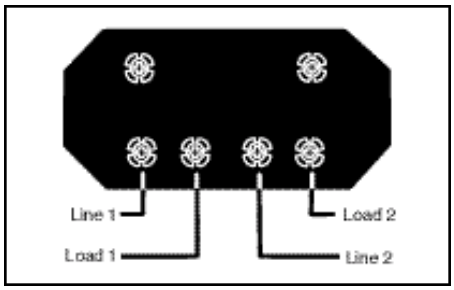

a. For each 240 V rated equipment: Wire the line power to the two line terminals of a relay and wire the equipment to the two load terminals.

b. For each 120 V rated equipment: Wire power to a line terminal and the equipment to an adjacent load terminal.

c. Feed the relay plugs through the holes into the low voltage compartment.

Contact Ratings - Not to Exceed

Standard Relay:	3 H.P. at 240 VAC 1.5 H.P at 120 VAC 25 Amps 1500 Watts

4. Place the antenna O-ring over the connector on top of the command center. Screw the external antenna onto the connector.

2.2 S-1000 Command Center Installation

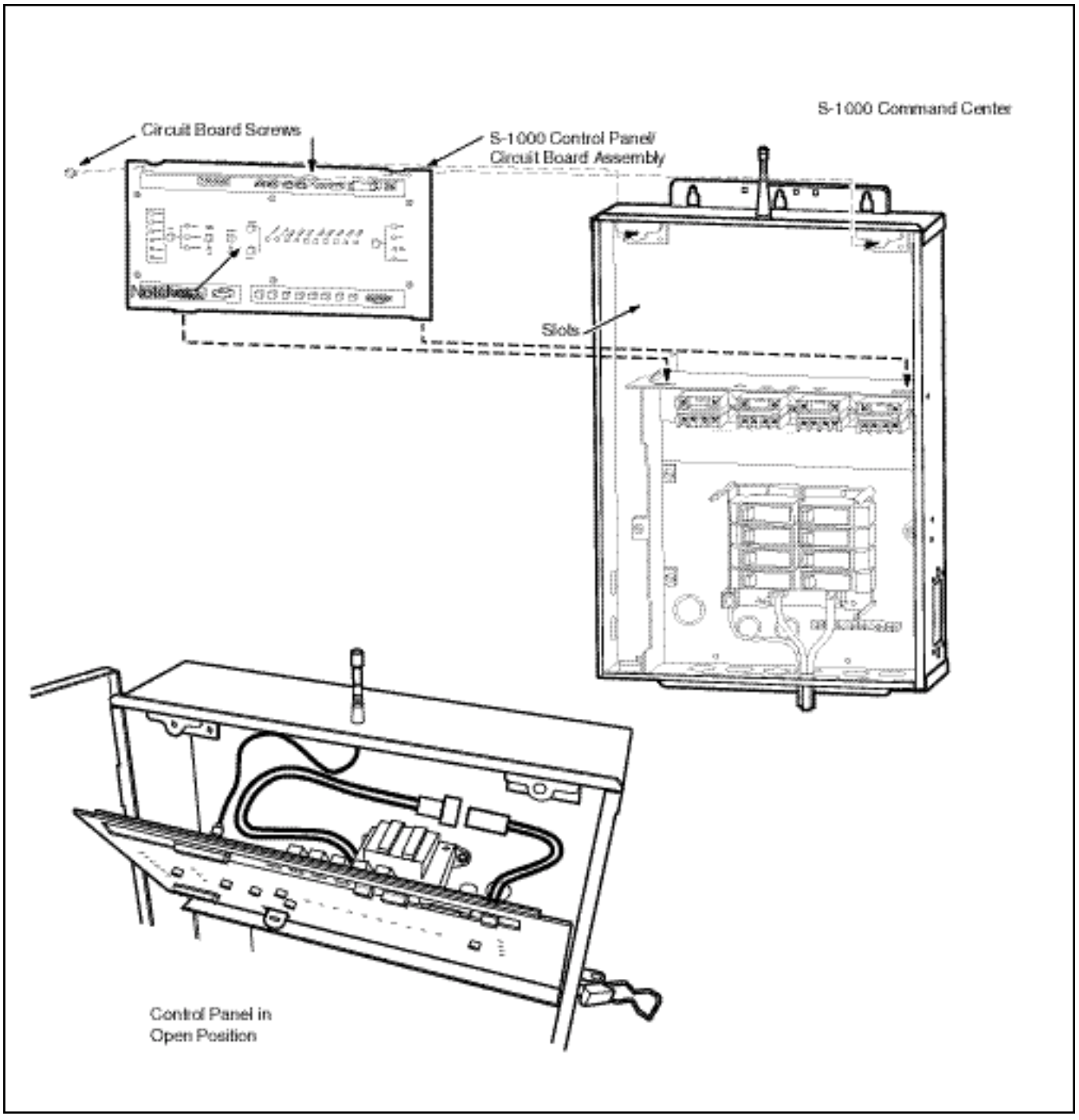

Command Center Circuit Board Installation

1. Unpack the circuit board from its packaging.
2. Remove and retain the two screws from the mounting brackets located at the top of the command center. They will be used to secure the circuit board when all of the electrical connections are complete.
3. Position the circuit board in the command center by aligning the bottom notches of the circuit board with the horizontal divider in the command center. The circuit board can remain in this position while the connections are being made.
4. Plug in connector.

S-1020 Command Center Without Sub Panel

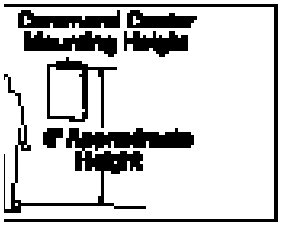

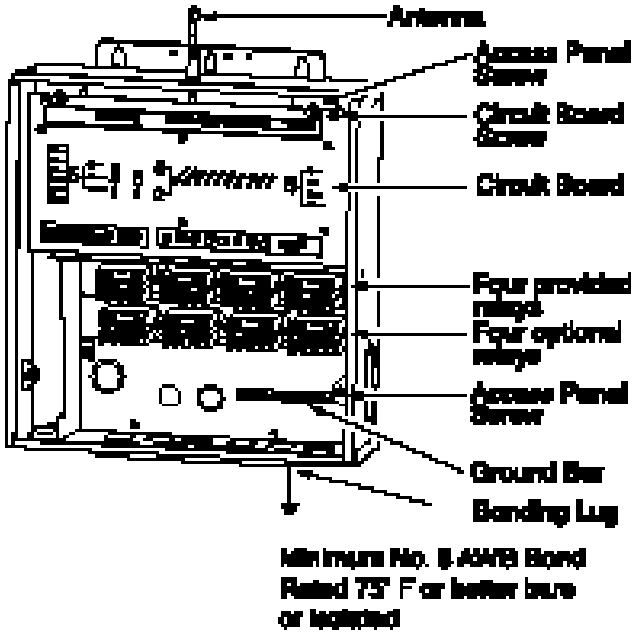

IMPORTANT: Do not turn on electrical power until all high voltage and low voltage connections have been made. Failure to follow this precaution can result in permanent damage to the command center, transformer or circuit board.

1. Mount the command center with the mounting brackets provided, no less than 5 feet from the pool or spa. It is recommended that the enclosure be mounted so the circuit board (see figure below) is nearly eye level. The radio communication is more reliable with the antenna at a higher position.

   Power Supply Ratings: 120/240 VAC up to three conductors plus ground, 50/60 Hz.

   Note: All electrical equipment must be five feet or more from the pool/spa and comply with all national, state and local codes.

   a. If the Polaris command center does not have an electrical subpanel, install an electrical supply panel with separate breakers for each load.

   b. Ensure that equipment motors have built-in thermal protection.

   c. Use the ground bar mounted in the command center for equipment grounding.

   d. Bond all equipment, including the command center, if necessary, to a solid ground connection.

   e. CAUTION: Adequate drainage must be provided if the equipment is to be installed in a pit.

   f. In areas where lightning strikes are common, install an external surge suppression device (part number 5-50 available separately) for both high and low voltage lines.

   g. If this enclosure is used for direct connection of underwater lights, a Ground Fault Circuit Breaker (GFCB) or Ground Fault Circuit Interrupter (GFCI) must be used. A rectangular knockout on the side of the enclosure may be used to mount an **APPROVED** wiring device for this purpose. If the unit is being installed outdoors, then an **APPROVED** rain cover must be installed over the wiring device in the side knockout. Refer to NEC 680-21 (b) or CEC 687-060, 062, and 066 for further details.

   h. Each command center enclosure comes standard with four high voltage relays. If additional relays are required based on the specific installation, then they must be purchased separately (part number S-30). Additional relays are installed below the factory installed relays. Simply remove two mounting screws in the location where the new relay will be installed, position the relay and secure using the screws just removed.

2.3 S-1020 Command Center Installation

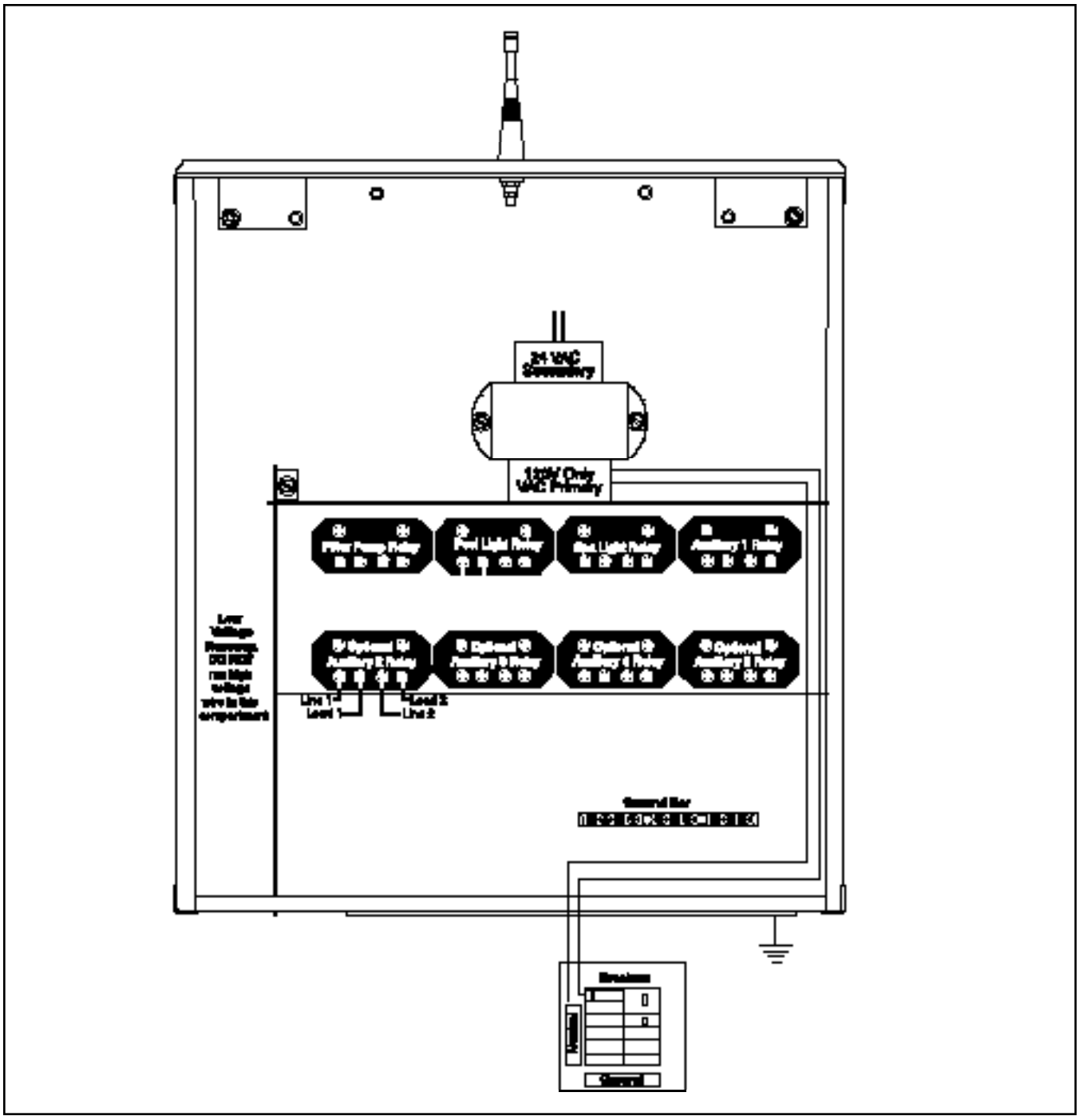

1. A wire connector is provided on this unit to connect a minimum No. 8 AWG (8.4 mm^2) solid copper conductor between this unit and any metal equipment, metal enclosures of electrical equipment, metal water pipe, or conduit within 5 feet (1.5m) of the unit.

   Feeder wires shall be No. 14 to No. 3 AWG copper rated for 75^{0}F or better.

2. Open the command center door. Remove the panel screws and the access panel to gain access to the electrical components. Run the conduit or wire from the power supply panel to the command center.

   Note: The number of pieces of equipment to be controlled will dictate the size of conduit needed.

   a. If the command center has a subpanel, wire power to the appropriate breakers. (Breakers sold separately. See table on warning label for approved breakers).

Suitable Listed Breakers						Wiring Information - COPPER Conductors					
Manufacturer	Circuit Breaker				Filler Plate	Minimum Wire Size and Temperature (AWG - Deg C)	Max. Current Capacity (AMPs)	Circuit Breaker Rating* (AMPs)	Max. Motor Load, 75C Installation		Terminal Tightening Torque
	BTD	TWIN	QUAD	QFCB					120V	240V	
Crouse-Hinds	MP	MH	–	MP1152F	FP-1C	14-60	15	15	1/2 HP	2 HP	20 lb-in
Cutler-Hammer	BR	BD	BQ	QF125	FP-1	14-60	20	20	1-1/2 HP	3 HP	20 lb-in
General Electric	THQL	–	–	THQL2F	T1-FP	12-60	30	30	–	–	50 lb-in
Siemens/ITE	QP	QT	QB	–	QF-2	6-60/75	40-60	40-60	–	–	35 lb-in
Square D	HOM	HOMT	–	HOM4-6F1	FP	6-60/75	65-85	65-80	–	–	35 lb-in
Thomas & Betts	TB	TBBD	TBBQ	BPB	PP	4-60/75	70-85	–	–	–	40 lb-in
						3-60/75	85-100	–	–	–	50 lb-in

   b. Pull wire sized appropriately for each piece of equipment from the equipment to the enclosure.

   c. Each piece of equipment requires its own high voltage relay. If one relay is to be used for several pieces of equipment, verify that the total current draw of all equipment does not exceed the current rating of the circuit.

   d. Connect the 120V wires to the transformer wires.

   e. Connect the equipment grounds.

   f. A green colored terminal or a terminal marked G, GR, Ground, Grounding, or ⏚ is located inside the supply terminal box or compartment. To reduce the risk of electric shock, this terminal must be connected to the ground means in the electric supply service panel with a continuous copper No. 8 AWG bare, covered or insulated wire per NEC Article 250-122.

   g. A bonding lug is provided on the external surface of the supply terminal box or compartment. To reduce the risk of electric shock, connect the local common bonding grid in the area of the pool or spa to this terminal with an insulated or bare copper conductor not smaller than No. 6 AWG.

2.3 S-1020 Command Center Installation

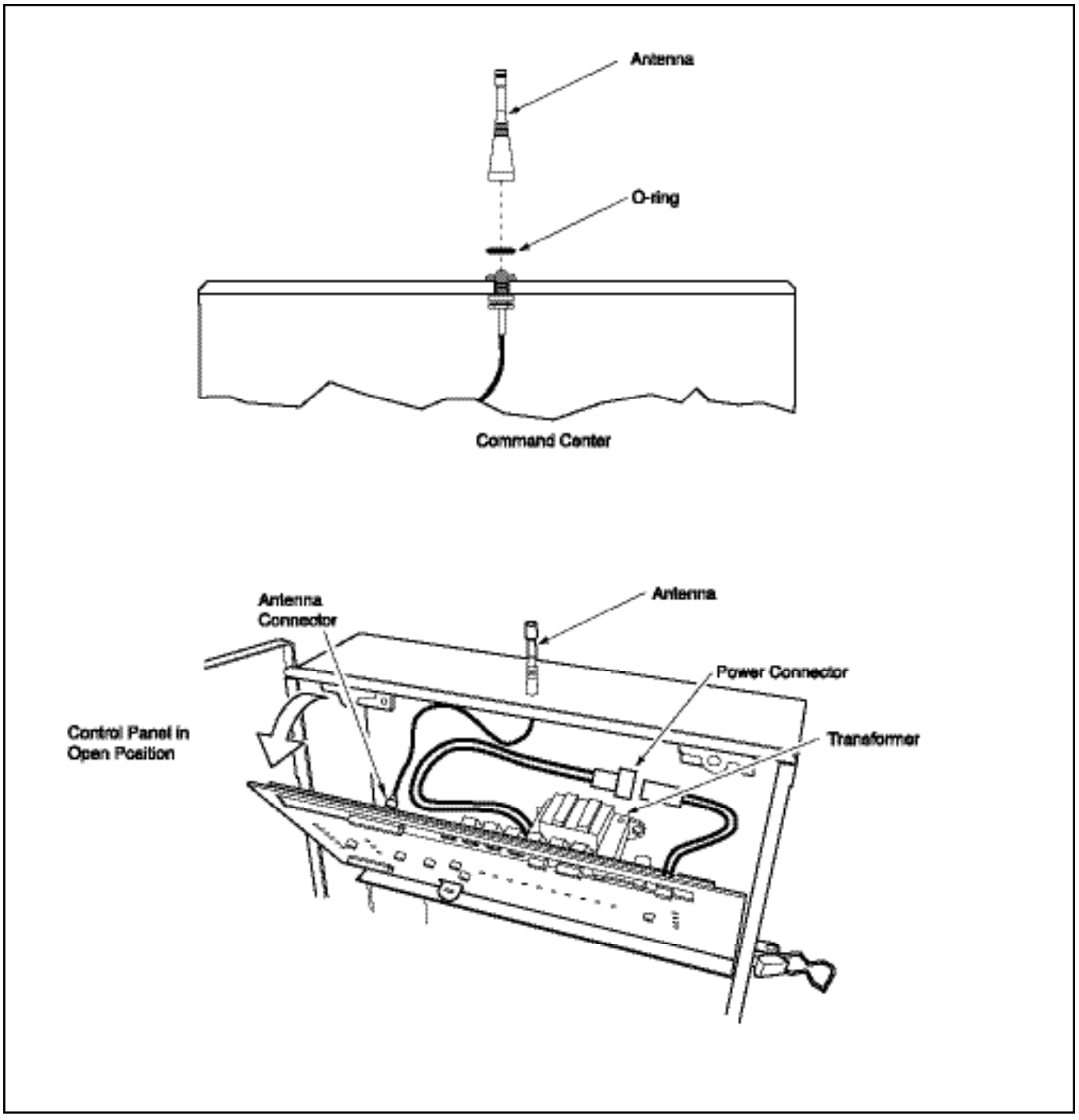

h. All field-installed metal components such as rails, ladders, drains, or other similar hardware located within 3m of the pool or spa must be bonded together and to the equipment bonding lug with copper conductors not smaller than No. 6 AWG.

3. Wire the relay of the equipment being used, installing additional relays when necessary.

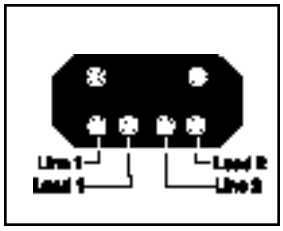

a. For each 240 V rated equipment: Wire the line power to the two line terminals of a relay and wire the equipment to the two load terminals.

b. For each 120 V rated equipment: Wire power to a line terminal and the equipment to an adjacent load terminal.

c. Feed the relay plugs through the holes into the low voltage compartment.

Contact Ratings - Not to Exceed

Standard Relay:	3 H.P. at 240 VAC 1.5 H.P at 120 VAC 25 Amps 1500 Watts

4. Place the antenna O-ring over the connector on top of the command center. Screw the external antenna onto the connector.

2.3 S-1020 Command Center Installation

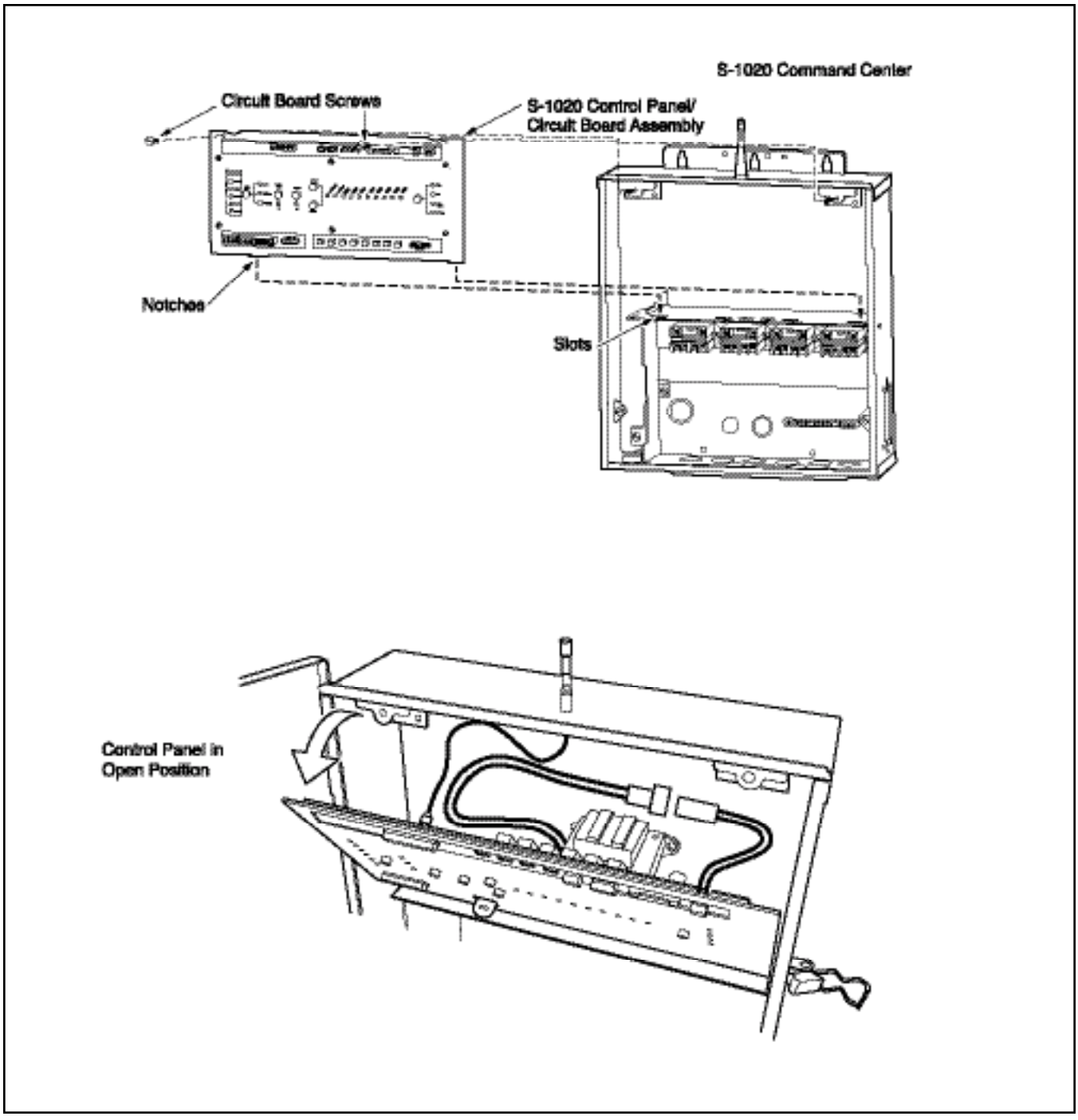

Command Center Circuit Board Installation

1. Unpack the circuit board from its packaging.
2. Remove and retain the two screws from the mounting brackets located at the top of the command center. They will be used to secure the circuit board when all of the electrical connections are complete.
3. Position the circuit board in the command center by aligning the bottom notches of the circuit board with the horizontal divider in the command center. The circuit board can remain in this position while the connections are being made.
4. Plug in connector.

2.4 Filter Pump Wiring (1-Speed)

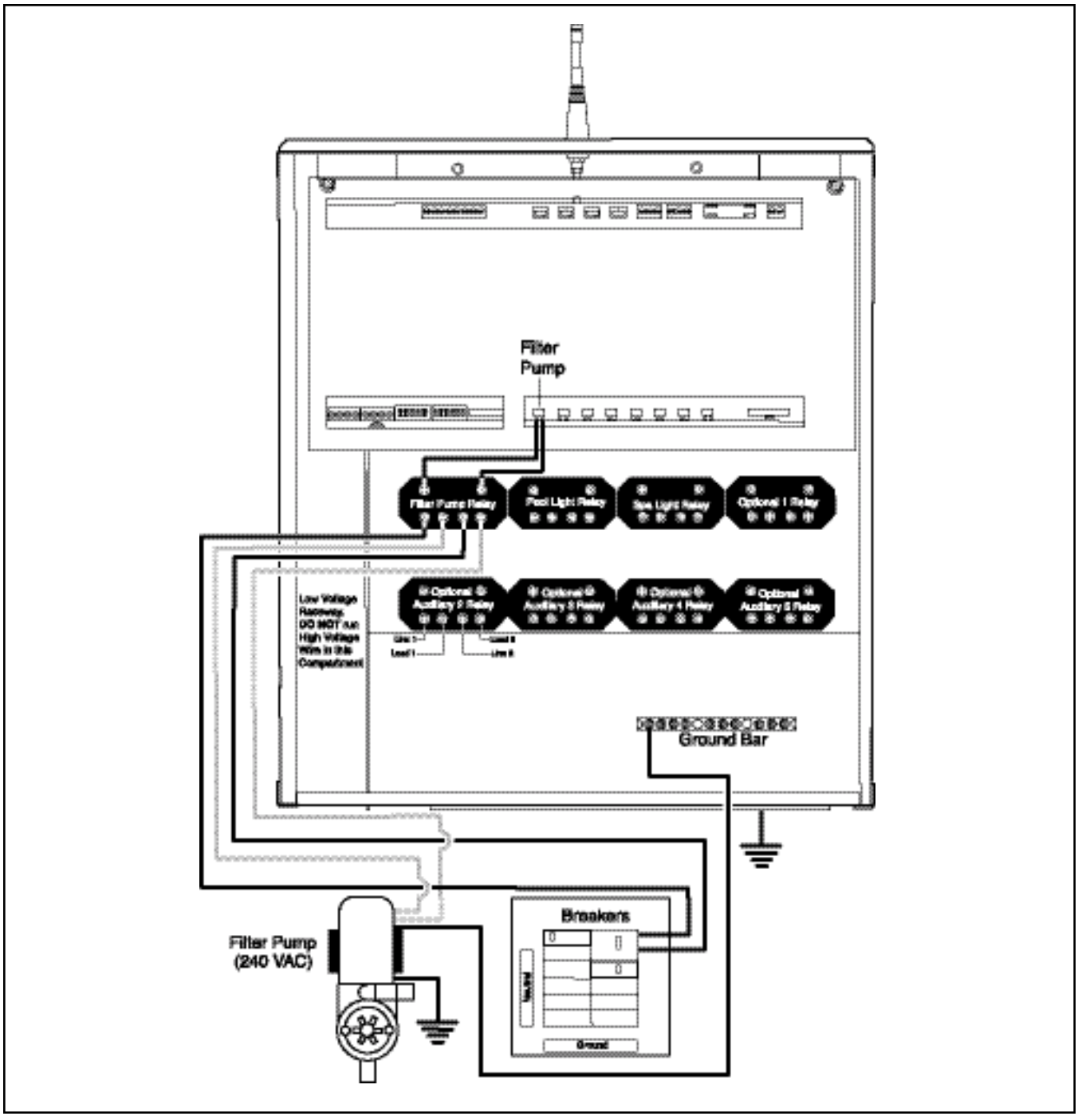

2.4 Filter Pump Wiring (1-Speed)

1. Ensure that equipment motors have built-in thermal protection.
2. Pull wire sized appropriately for each piece of equipment from the equipment to the enclosure.
3. Each piece of equipment should have its own high voltage relay. In some cases, a relay may be shared by more than one piece of equipment as long as total amperage draw does not exceed 25 Amps 91500 watts).
4. Connect the equipment grounds.
5. A green colored terminal or a terminal marked G, GR, Ground, Grounding, or ⏚ is located inside the supply terminal box or compartment. To reduce the risk of electric shock, this terminal must be connected to the ground means in the electric supply service panel with a continuous copper No. 8 AWG bare, covered or insulated wire per NEC Article 250-122.
6. A bonding lug is provided on the external surface of the supply terminal box or compartment. To reduce the risk of electric shock, connect the local common bonding grid in the area of the pool or spa to this terminal with an insulated or bare copper conductor not smaller than No. 8 AWG.
7. Wire the relay of the equipment being used, installing additional relays when necessary.

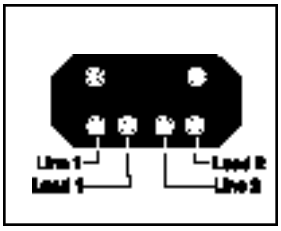

8. For each 240 V rated equipment: Wire the line power to the two line terminals of a relay and wire the equipment to the two load terminals.
9. For each 120 V rated equipment: Wire power to a line terminal and the equipment to an adjacent load terminal.
10. Feed the relay plugs through the holes into the low voltage compartment.

Contact Ratings - Not to Exceed

Standard Relay:	3 H.P. at 240 VAC 1.5 H.P at 120 VAC 25 Amps 1500 Watts

IMPORTANT: Do not turn on electrical power until all high voltage and low voltage connections have been made. Failure to follow this precaution can result in permanent damage to the command center, transformer or circuit board.

Note: All electrical equipment must be five feet or more from the pool/spa and comply with all national, state and local codes.

2.5 Filter Pump Wiring (2-Speed)

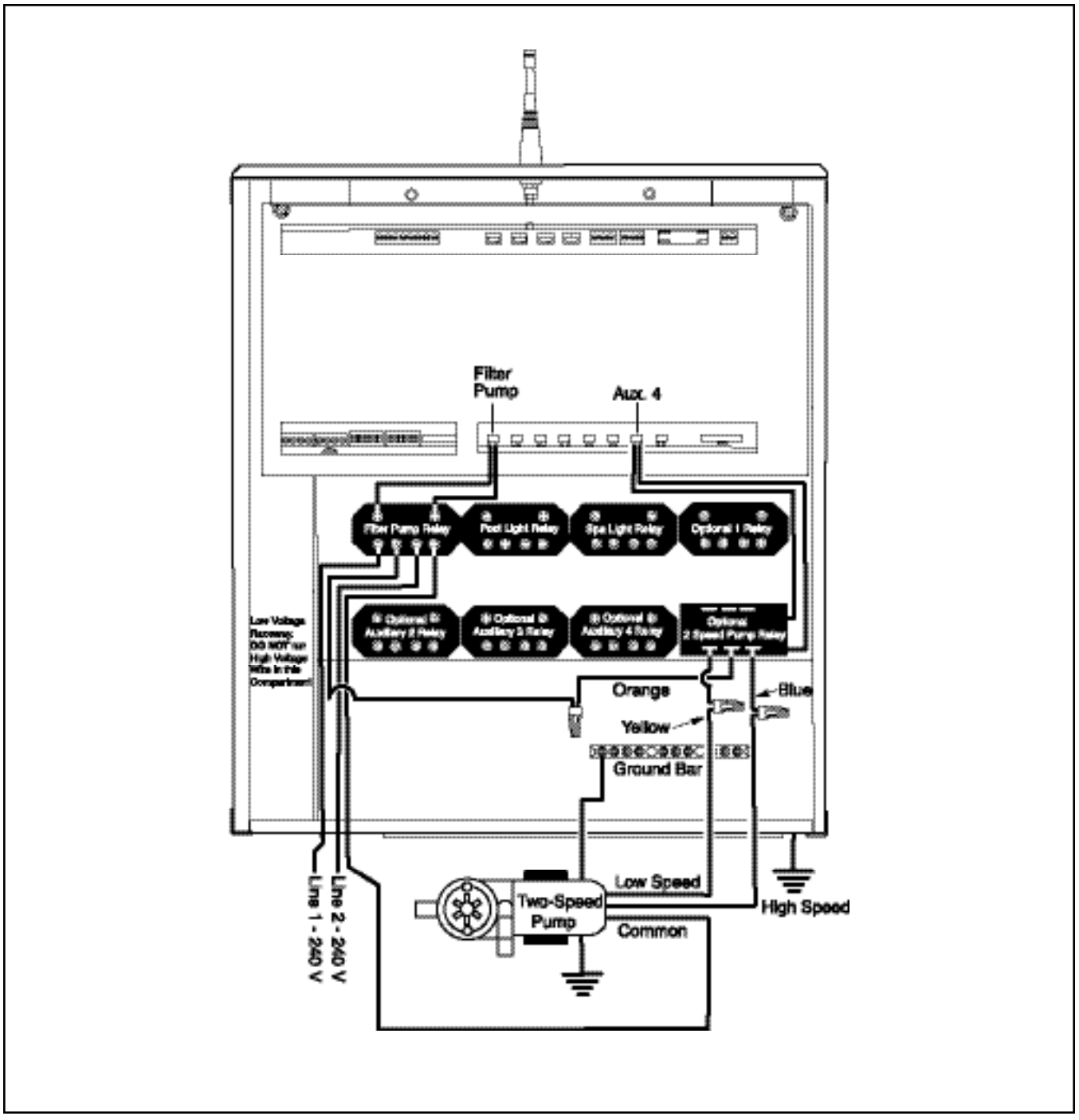

2-Speed Pump

a. To connect a two speed pump, a two speed relay kit (part number S-80) must be purchased. The relay can be mounted in one of the open positions in the bottom row.

b. See Two Speed Pump Wiring Diagram for system connections.

Contact Ratings - Not to Exceed

Two Speed Pump Relay:	2.5 H.P. at 240 VAC 1 H.P at 120 VAC 20 Amps

Motor wires	**S-80 2-Speed Relay Wires**
Low Speed Wire	Blue Wire
High Speed Wire	Yellow Wire
Common Wire > To one LOAD side of Filter Pump Relay	Orange Wire > To other LOAD side of Filter Pump Relay

2.6 Pool Light Wiring

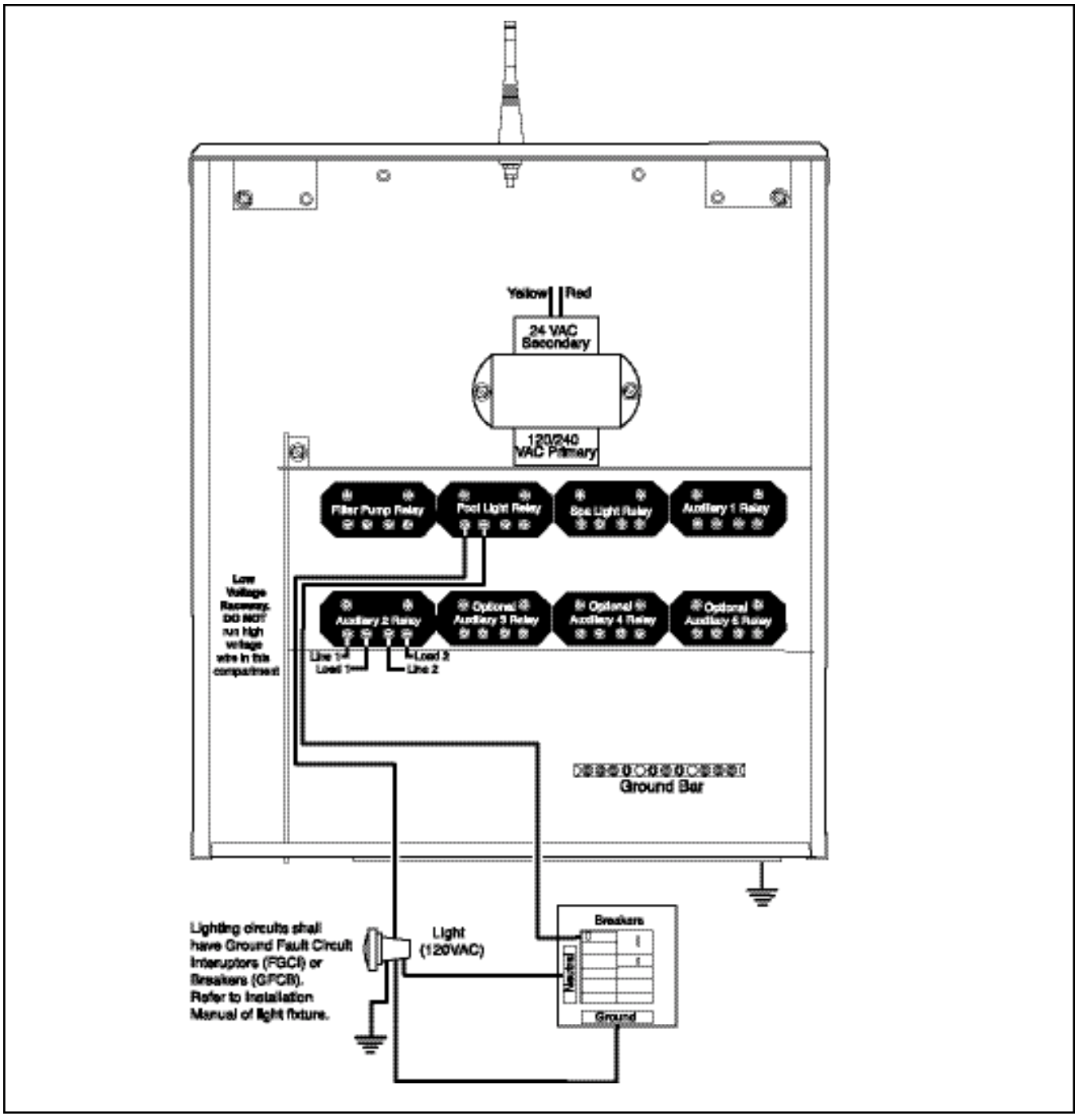

Pool Light Wiring

1. Ensure that equipment motors have built-in thermal protection.
2. Pull wire sized appropriately for each piece of equipment from the equipment to the enclosure.
3. Each piece of equipment should have its own high voltage relay. In some cases, a relay may be shared by more than one piece of equipment as long as total amperage draw does not exceed 25 Amps 91500 watts).
4. Connect the equipment grounds.
5. A green colored terminal or a terminal marked G, GR, Ground, Grounding, or ⏚ is located inside the supply terminal box or compartment. To reduce the risk of electric shock, this terminal must be connected to the ground means in the electric supply service panel with a continuous copper No. 8 AWG bare, covered or insulated wire per NEC Article 250-122.
6. A bonding lug is provided on the external surface of the supply terminal box or compartment. To reduce the risk of electric shock, connect the local common bonding grid in the area of the pool or spa to this terminal with an insulated or bare copper conductor not smaller than No. 8 AWG.
7. Wire the relay of the equipment being used, installing additional relays when necessary.

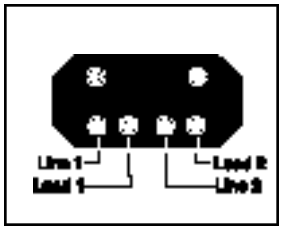

8. For each 240 V rated equipment: Wire the line power to the two line terminals of a relay and wire the equipment to the two load terminals.
9. For each 120 V rated equipment: Wire power to a line terminal and the equipment to an adjacent load terminal.
10. Feed the relay plugs through the holes into the low voltage compartment.

Contact Ratings - Not to Exceed

Standard Relay:	3 H.P. at 240 VAC 1.5 H.P at 120 VAC 25 Amps 1500 Watts

IMPORTANT: Do not turn on electrical power until all high voltage and low voltage connections have been made. Failure to follow this precaution can result in permanent damage to the command center, transformer or circuit board.

Note: All electrical equipment must be five feet or more from the pool/spa and comply with all national, state and local codes.

2.7 Spa Light Wiring

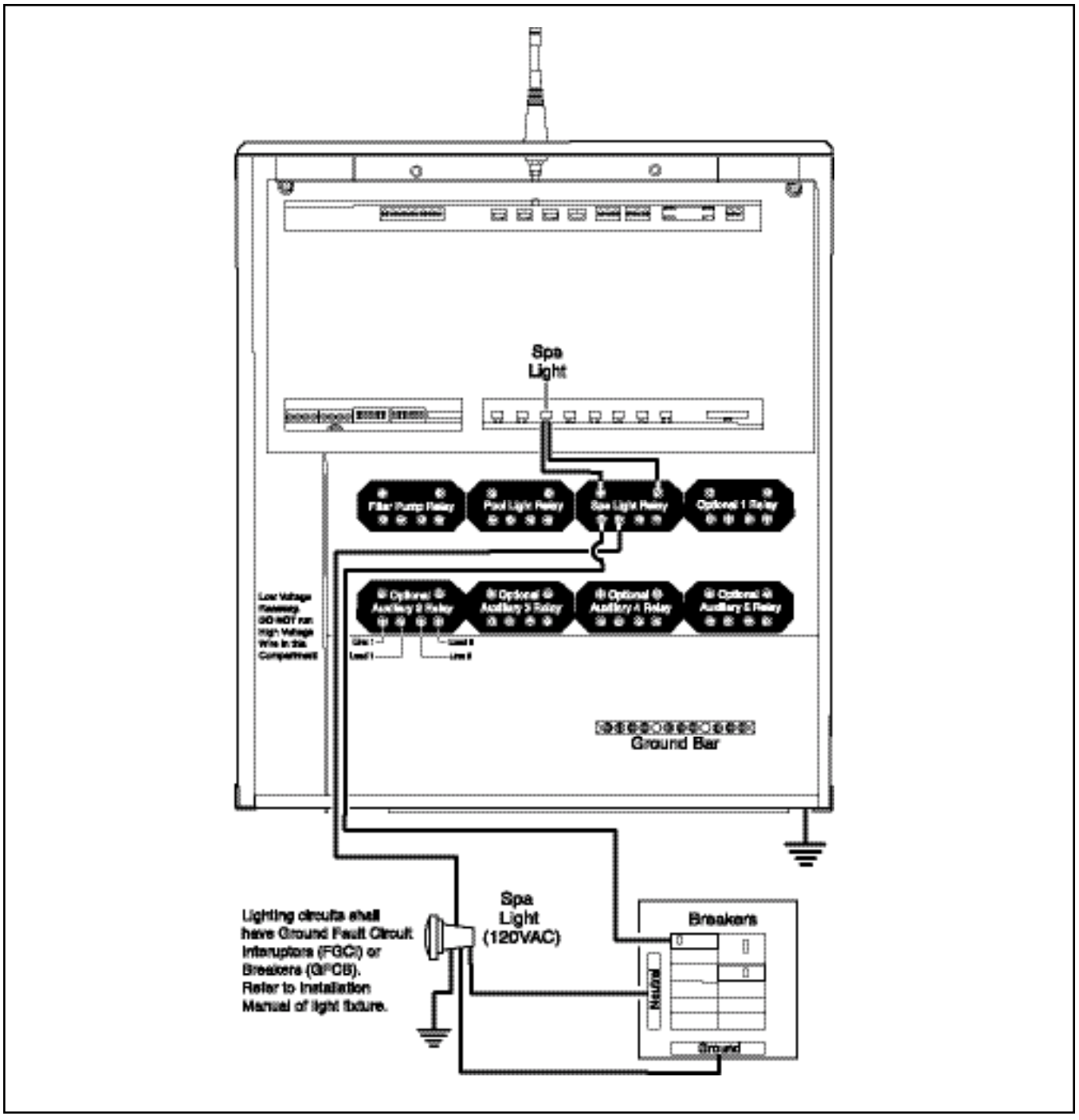

Spa Light Wiring

1. Ensure that equipment motors have built-in thermal protection.
2. Pull wire sized appropriately for each piece of equipment from the equipment to the enclosure.
3. Each piece of equipment should have its own high voltage relay. In some cases, a relay may be shared by more than one piece of equipment as long as total amperage draw does not exceed 25 Amps 91500 watts).
4. Connect the equipment grounds.
5. A green colored terminal or a terminal marked G, GR, Ground, Grounding, or ⏚ is located inside the supply terminal box or compartment. To reduce the risk of electric shock, this terminal must be connected to the ground means in the electric supply service panel with a continuous copper No. 8 AWG bare, covered or insulated wire per NEC Article 250-122.
6. A bonding lug is provided on the external surface of the supply terminal box or compartment. To reduce the risk of electric shock, connect the local common bonding grid in the area of the pool or spa to this terminal with an insulated or bare copper conductor not smaller than No. 8 AWG.
7. Wire the relay of the equipment being used, installing additional relays when necessary.

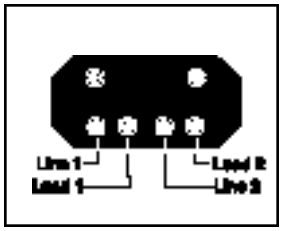

8. For each 240 V rated equipment: Wire the line power to the two line terminals of a relay and wire the equipment to the two load terminals.
9. For each 120 V rated equipment: Wire power to a line terminal and the equipment to an adjacent load terminal.
10. Feed the relay plugs through the holes into the low voltage compartment.

Contact Ratings - Not to Exceed

Standard Relay:	3 H.P. at 240 VAC 1.5 H.P at 120 VAC 25 Amps 1500 Watts

IMPORTANT: Do not turn on electrical power until all high voltage and low voltage connections have been made. Failure to follow this precaution can result in permanent damage to the command center, transformer or circuit board.

Note: All electrical equipment must be five feet or more from the pool/spa and comply with all national, state and local codes.

2.8 Fiber Optic Lights Wiring

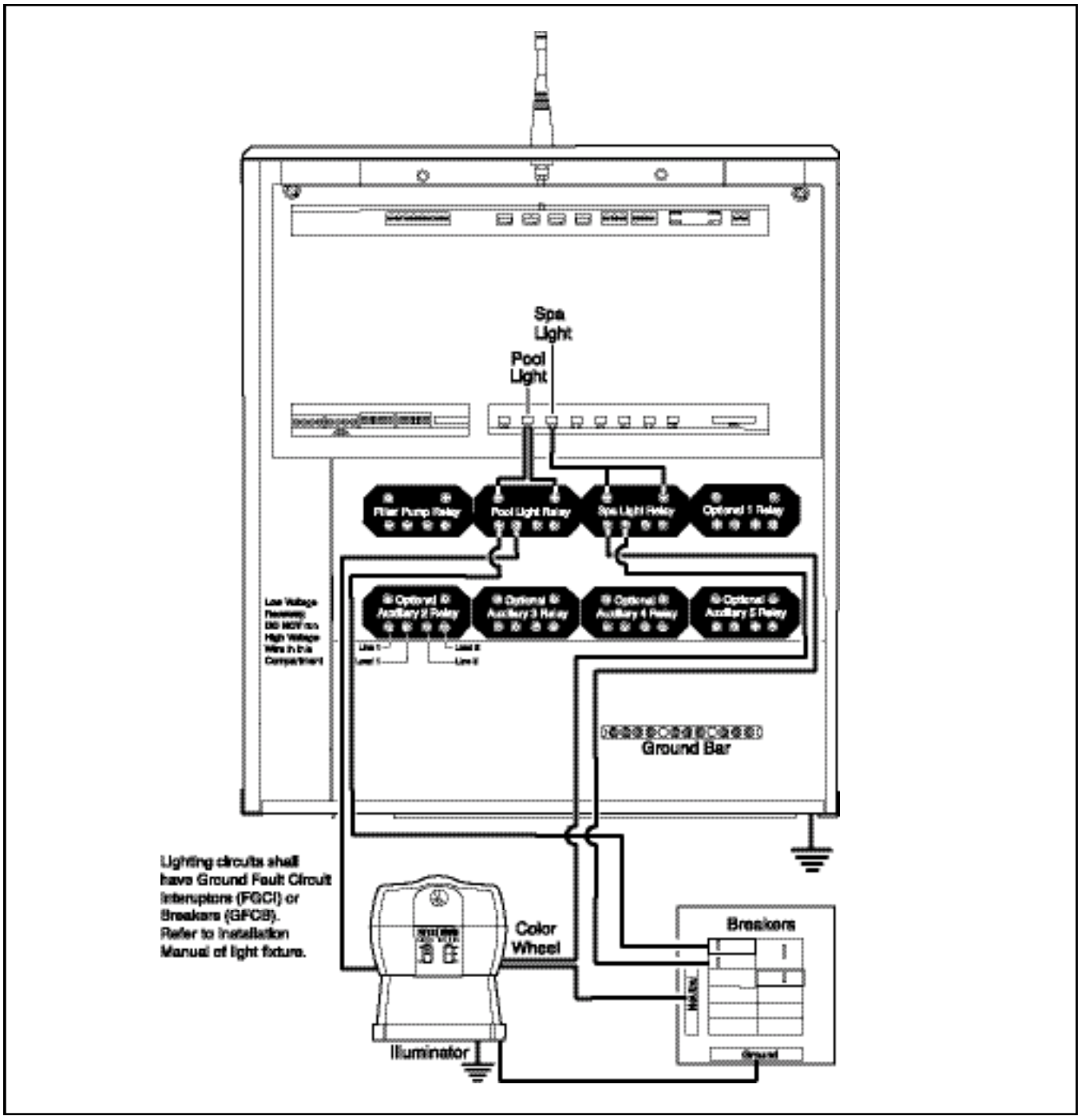

2.8 Fiber Optic Lights Wiring

Fiber Optic Light Wiring

1. Ensure that equipment motors have built-in thermal protection.
2. Pull wire sized appropriately for each piece of equipment from the equipment to the enclosure.
3. Each piece of equipment should have its own high voltage relay. In some cases, a relay may be shared by more than one piece of equipment as long as total amperage draw does not exceed 25 Amps 91500 watts).
4. Connect the equipment grounds.
5. A green colored terminal or a terminal marked G, GR, Ground, Grounding, or ⏚ is located inside the supply terminal box or compartment. To reduce the risk of electric shock, this terminal must be connected to the ground means in the electric supply service panel with a continuous copper No. 8 AWG bare, covered or insulated wire per NEC Article 250-122.
6. A bonding lug is provided on the external surface of the supply terminal box or compartment. To reduce the risk of electric shock, connect the local common bonding grid in the area of the pool or spa to this terminal with an insulated or bare copper conductor not smaller than No. 8 AWG.
7. Wire the relay of the equipment being used, installing additional relays when necessary.

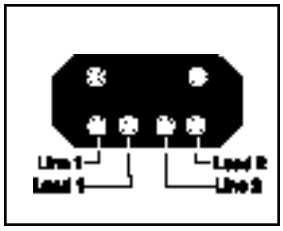

8. For each 240 V rated equipment: Wire the line power to the two line terminals of a relay and wire the equipment to the two load terminals.
9. Feed the relay plugs through the holes into the low voltage compartment.

Contact Ratings - Not to Exceed

Standard Relay:	3 H.P. at 240 VAC 1.5 H.P at 120 VAC 25 Amps 1500 Watts

IMPORTANT: Do not turn on electrical power until all high voltage and low voltage connections have been made. Failure to follow this precaution can result in permanent damage to the command center, transformer or circuit board.

Note: All electrical equipment must be five feet or more from the pool/spa and comply with all national, state and local codes.

When fiber optic lighting is used, Dip Switch 7 in Bank 1 should be in the ON position.

In place of Pool Light, a menu pick for Fiber will be displayed. Pressing this will allow the user control of the fiber optic illuminator and color wheel power. The illuminator power must be connected to the Pool Light Relay output and the color wheel power must be connected to the Spa Light Relay output.

2.9 Cleaner Booster Pump Wiring

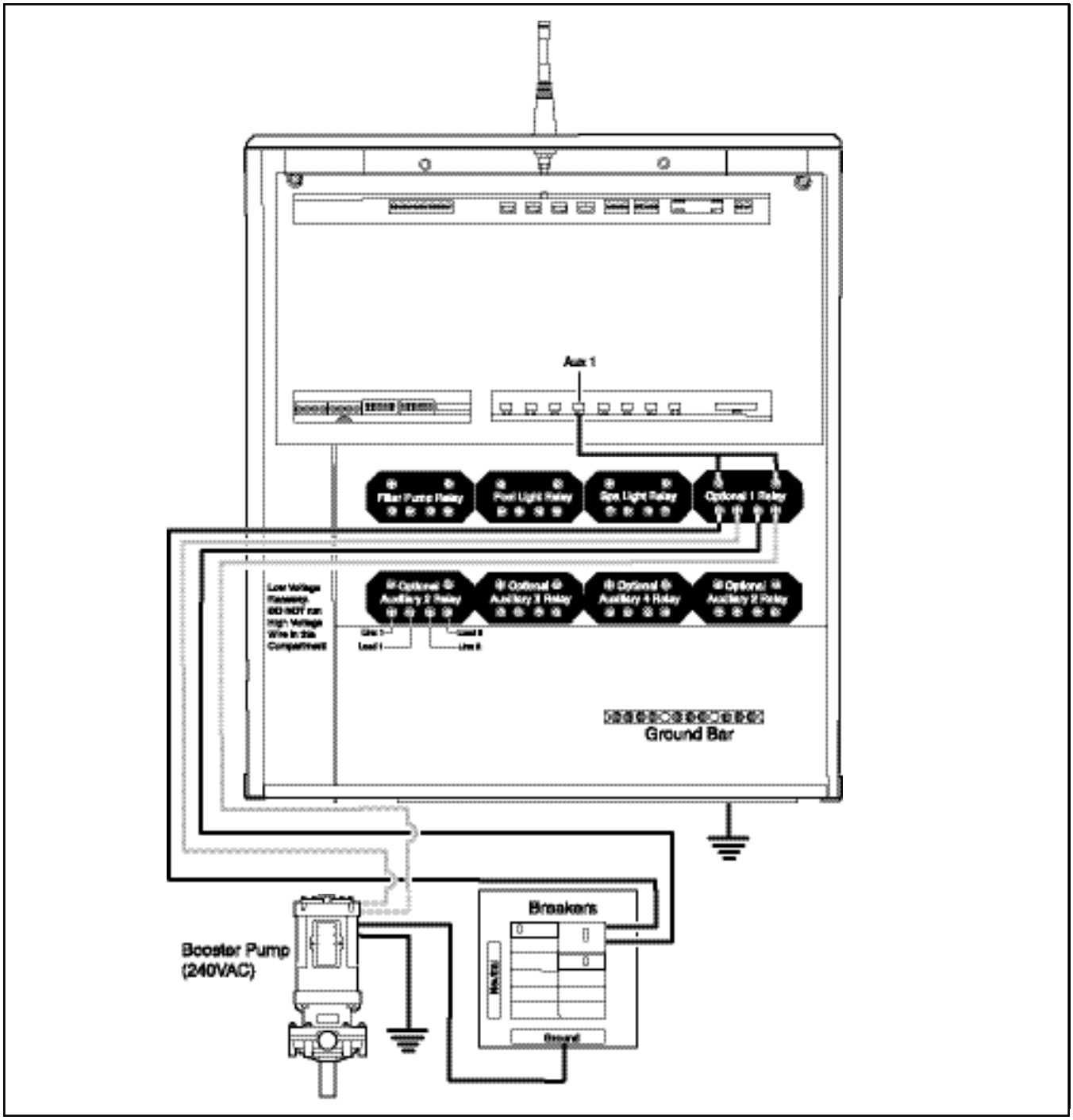

2.9 Cleaner Booster Pump Wiring

Booster Pump Wiring

1. Ensure that equipment motors have built-in thermal protection.
2. Pull wire sized appropriately for each piece of equipment from the equipment to the enclosure.
3. Each piece of equipment requires its own high voltage relay. If one relay is to be used for several pieces of equipment, verify that the total current draw of all equipment does not exceed the current rating of the circuit.
4. Connect the 120V wires to the transformer wires.
5. Connect the equipment grounds.
6. A green colored terminal or a terminal marked G, GR, Ground, Grounding, or ⏚ is located inside the supply terminal box or compartment. To reduce the risk of electric shock, this terminal must be connected to the ground means in the electric supply service panel with a continuous copper No. 8 AWG bare, covered or insulated wire per NEC Article 250-122.
7. A bonding lug is provided on the external surface of the supply terminal box or compartment. To reduce the risk of electric shock, connect the local common bonding grid in the area of the pool or spa to this terminal with an insulated or bare copper conductor not smaller than No. 6 AWG.
8. Wire the relay of the equipment being used, installing additional relays when necessary.

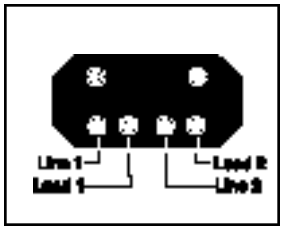

9. For each 240 V rated equipment: Wire the line power to the two line terminals of a relay and wire the equipment to the two load terminals.
10. For each 120 V rated equipment: Wire power to a line terminal and the equipment to an adjacent load terminal.
11. Feed the relay plugs through the holes into the low voltage compartment.

Contact Ratings - Not to Exceed

Standard Relay:	3 H.P. at 240 VAC 1.5 H.P at 120 VAC 25 Amps 1500 Watts

IMPORTANT: Do not turn on electrical power until all high voltage and low voltage connections have been made. Failure to follow this precaution can result in permanent damage to the command center, transformer or circuit board.

Note: All electrical equipment must be five feet or more from the pool/spa and comply with all national, state and local codes.

2.10 Heater Wiring

Sol Low Voltage Heater Connection

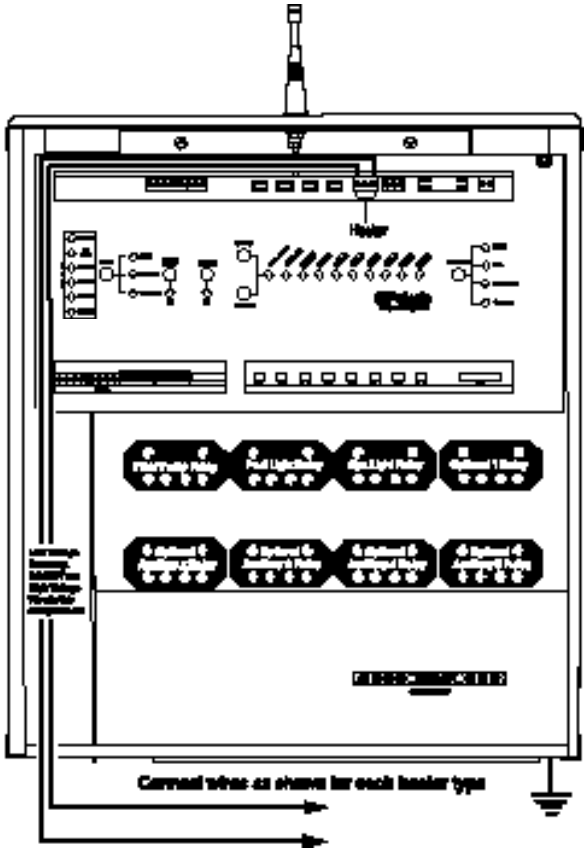

For Hayward Heaters

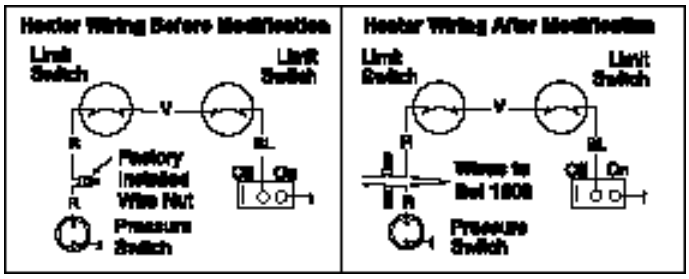

For Teledyne Laars Heaters

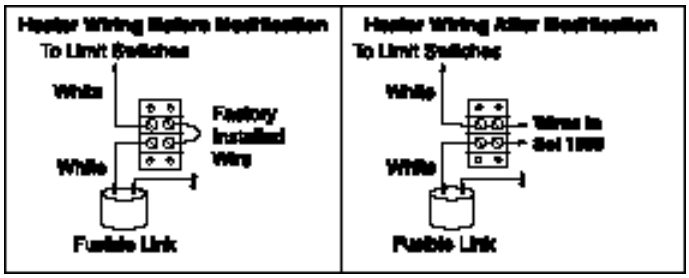

Sol Low Voltage Heater Connection

1. Connect two 18 AWG wires, designed for use in hot environments to the 2-pin terminal bar on the circuit board labeled “HEATER.”
2. Run the wires through the low voltage raceway in the Command Center.

Hayward Heaters Wiring Guidelines

For HM2, Models 150, 200, 250, 300, 350 and 400

1. Remove the heater service door.
2. Remove the factory-installed wire nuts located between the two red wires labeled "Connection for Field Installed Control Switch".
3. Wire nut the two heater wires from the command center circuit board to the two red wires as shown in the diagram.
4. Turn the thermostat selector switch to either the ON, HIGH or SPA position and set the heater thermostat(s) to the maximum setting.

Teledyne Laars Heater Wiring Guidelines

For Series 2 Model ESC Pool and Spa Heaters

1. Remove the heater service door.
2. Remove the factory-installed wire between Terminal 1 and Terminal 2 on the terminal strip.
3. Connect the wires from the command center circuit board to the two terminals. Teledyne Laars requires the heater hookup wires to be 14-AWG copper with a temperature rating of 105° or higher.
4. Turn the thermostat selector switch to either ON, HIGH or SPA and set the heater thermostat(s) to the maximum setting.

2.10 Heater Wiring

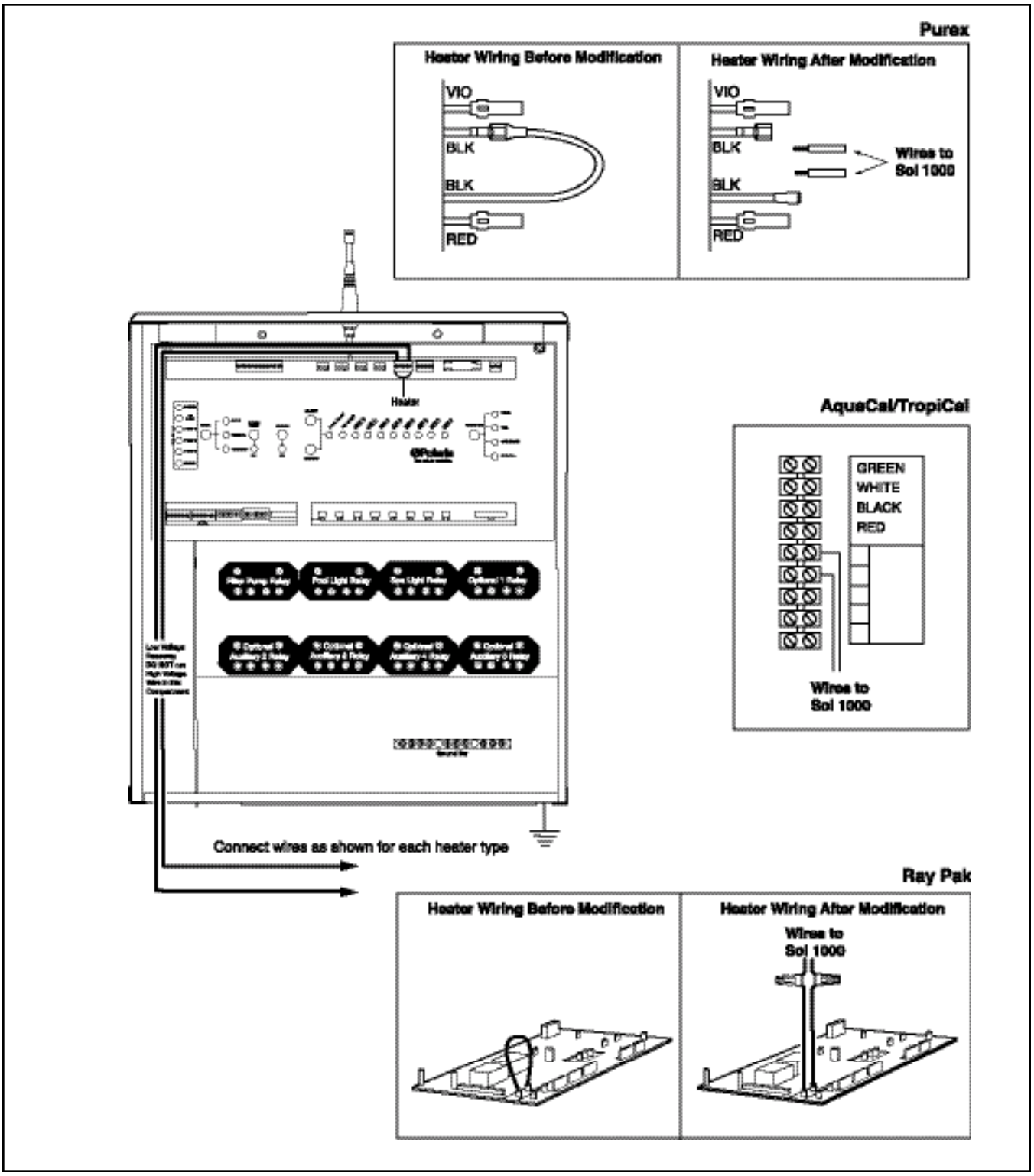

Purex Heater Wiring Guidelines

For MiniMax and Tropical Isle Pool and Spa Heaters

1. Remove the heater service door.
2. Separate the black wire (common) from each other (see the diagram below).
3. Connect the wires from the command center circuit board to the two black wires as shown. The violet and red wires will remain unused.
4. Turn the heater switch to the ON position and set the heater thermostat(s) to the maximum setting.
5. When connecting a Polaris Sol 1000 Wireless Remote Controller to a Purex heater, Purex requires that you install the low voltage thermostat wires in a separate conduit from ANY line voltage wires. Failure to do so will cause the thermostat relay to react erratically.

AquaCal TropiCal Heat Pump Connections

The thermostat on the TropiCal heat pump is wired in parallel to the thermostat on the Sol controller. Unlike most heaters and heat pumps, the thermostat must be turned all the way down to remove it from the system and allow Sol full control.

1. Connect two 18 AWG wires, designed for use in hot environments, to the 2-pin terminal bar on the circuit board labeled "HEATER".
2. Locate the Controller Options terminal block inside the heat pumps electric box.
3. Connect the 18 AWG wires from the controller to the Controller Options terminals designated A and B.
4. Turn the heat pumps thermostats all the way down.
5. Set the heat pumps thermostat selector switch to the off position.

Raypak Heater Wiring Guidelines

For RS2100

1. Remove the heater service door.
2. Cut the factory-installed wire.
3. Wire-nut the two heater wires from the command center circuit board to the two wires.
4. Turn the heater switch to the ON position and set the heater thermostat(s) to the maximum setting.
5. For Sol controllers located more than ten feet from the heater, RayPak recommends the use of the RayPak Interface Module Kit (p/n 005386) to eliminate outside interference.

2.11 Other Natural Gas and Propane Gas Heater Wiring

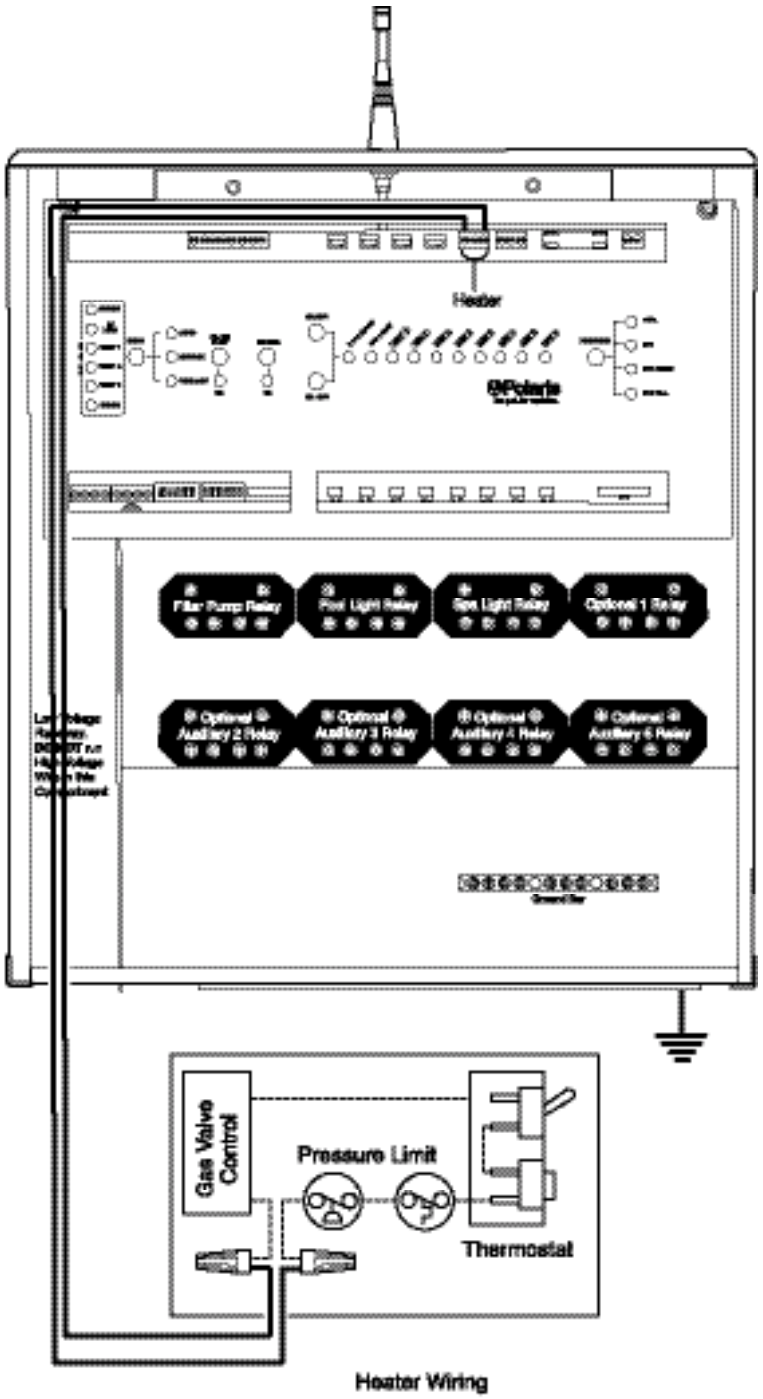

Heater Wiring

Other Natural Gas Heaters and Propane Heaters

1. Connect two 18 AWG wires (designed for hot environments) to the appropriate terminals on the heater terminal bar.
2. Connect two heater wires from the command center circuit board to the heater in series as if wiring a fireman's switch or heater delay.
3. Do not disconnect the high limit or pressure switches.
4. Turn the heater thermostat(s) to the maximum setting.
5. Turn the heater switch to the ON position.
6. Connect the heater to the low voltage terminal on the circuit board (all gas heaters or heat pumps with thermostatic circuitry of 24 VAC or less). **Do not disconnect the high limit or pressure switches inside the heater.**

   Note: For connections to a specific heater brand, see the heater wiring guidelines and consult the heater or heat pump manufacturer.

   a. **Gas or Propane Heaters Connections To Circuit Board**

      1. Connect two 18 AWG wires, designed for use in hot environments, to the 2-pin terminal bar on the circuit board labeled “HEATER”.
      2. Bring the two wires from the circuit board to the heater and wire nut in series with the heater circuitry as if wiring a fireman’s switch or heater delay. (for heaters with dual thermostats and a three position switch (Pool/Off/Spa), the two control wires must be connected to one side of the three positions switch (Pool or Spa) and that position must be the one turned on in step 4 below.
      3. Turn the heater thermostat to maximum.
      4. Turn the heater toggle switch on.
      5. Re-light the pilot light (if necessary) before proceeding to the next step.

2.12 Electric Heater and Heat Pump Wiring

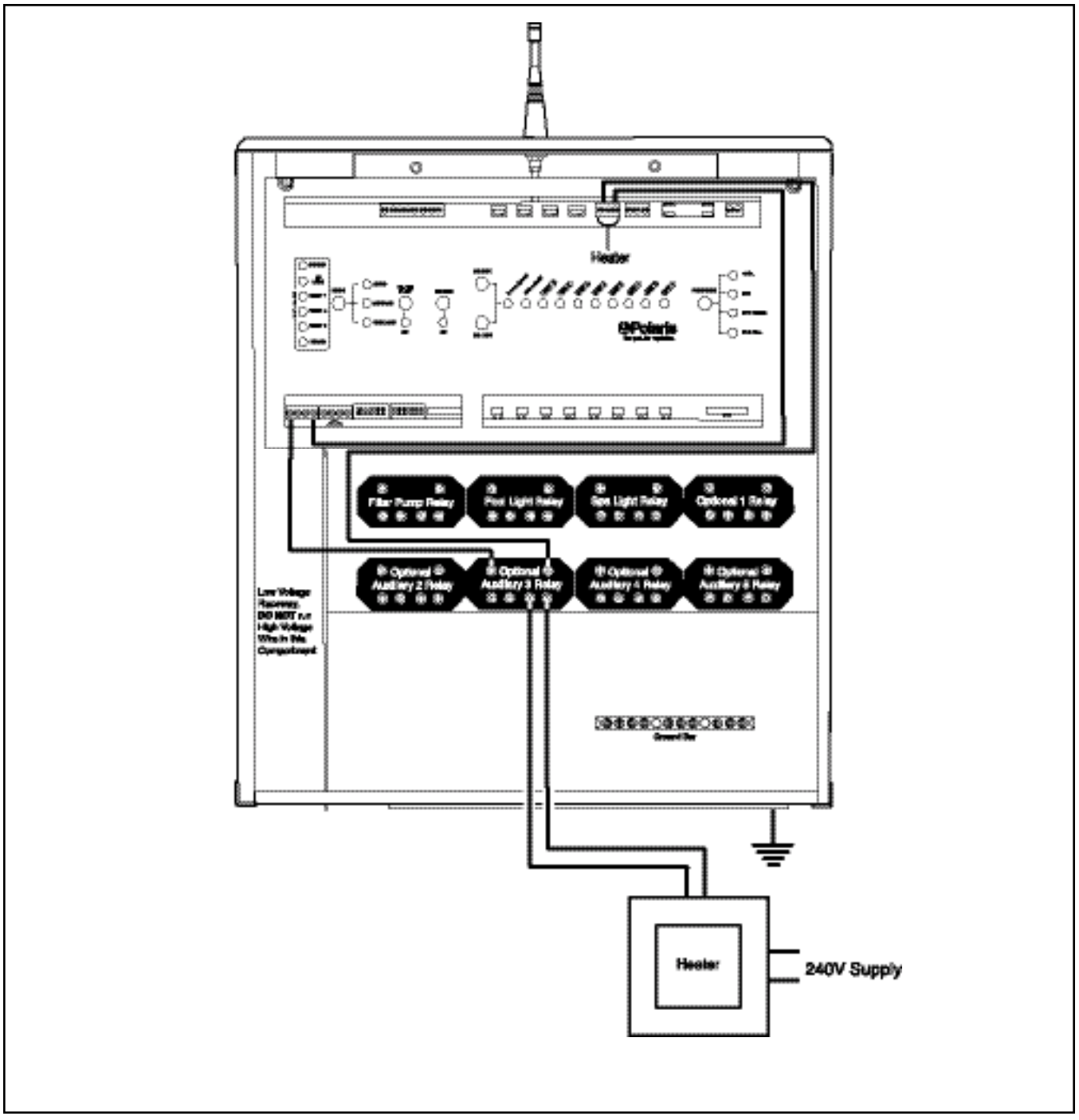

Electric Heater and Heat Pump Wiring

Do not use these guidelines to connect a heater with a high voltage (120/240 VAC) thermostat into a low voltage terminal bar.

High Voltage Electric Heater

1. A high voltage electric heater must be connected to a high voltage auxiliary relay inside the high voltage wiring area of the Sol command center.
2. Turn the heater thermostat setting to maximum.
3. Turn the heater power position to the on position.

Note: The heater connections to the high voltage relay acts only as a switch and should not be used for the supply line voltage.

Heat Pumps

1. Connect two 18 AWG wires, designed for use in hot environments, to the 2-pin terminal bar on the circuit board labeled “HEATER.”
2. Bring the two wires from the circuit board to the heat pump and wire nut in series with the heat pump circuitry as if wiring a fireman’s switch or heater delay. (Consult heat pump manufacturer for specific instructions.).
3. Turn the heat pump thermostat to maximum.
4. Turn the heat pump toggle switch on.

2.13 Solar System Wiring

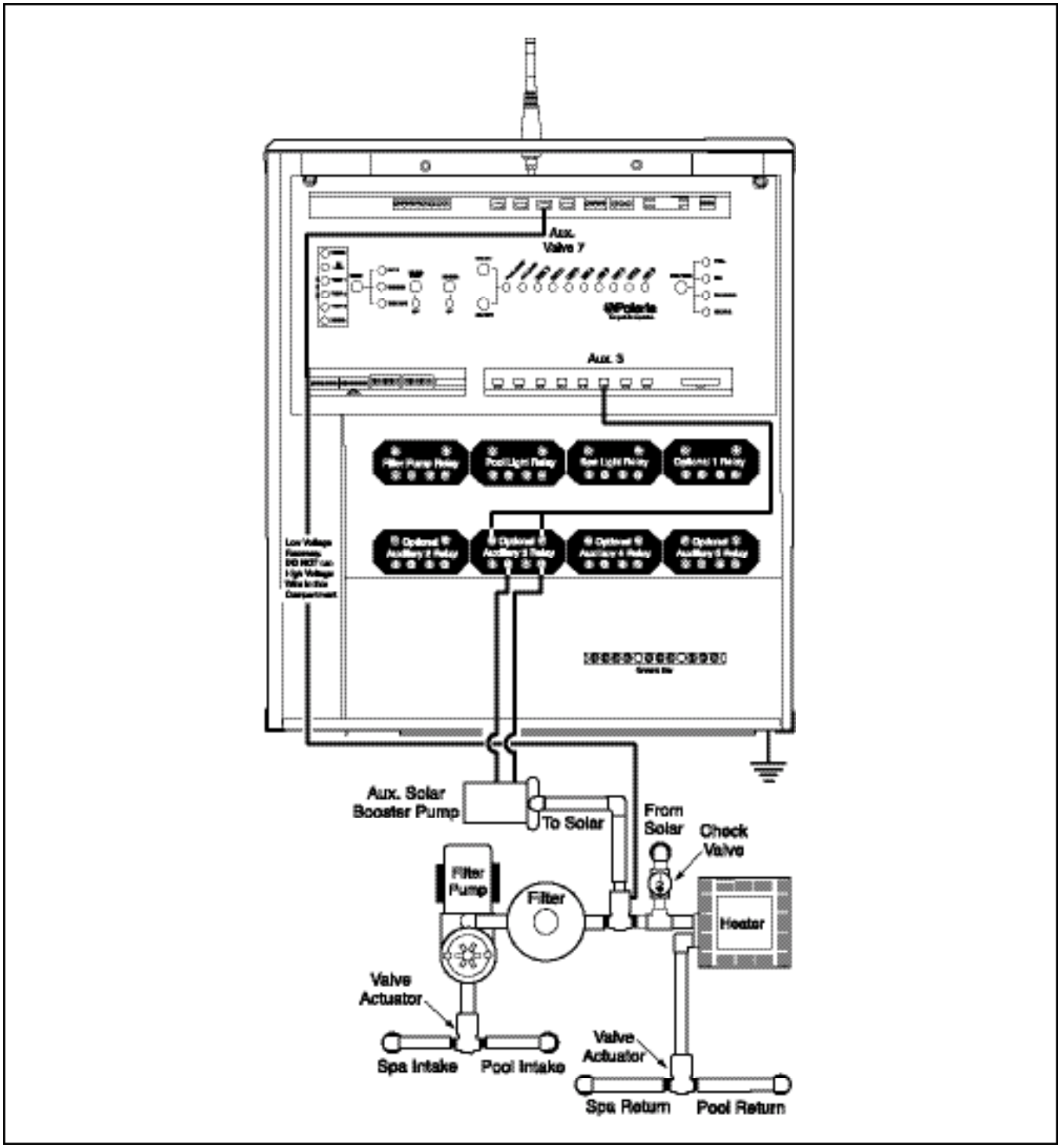

Solar System Wiring

Note: Do not coil the valve actuator cable inside the command center.

1. Run the valve actuator wires back to the low voltage compartment of the command center, through the low voltage raceway, and plug the solar valve actuator into the socket labeled AUX VALVE 7.
2. Turn Dip Switch 4 in Bank 1 to the ON position.
3. If there is a booster pump on the Solar system, the booster pump should be wired to Auxiliary 3 and Dip Switch 5 in Bank 1 should be turned on.

2.14 Blower Wiring

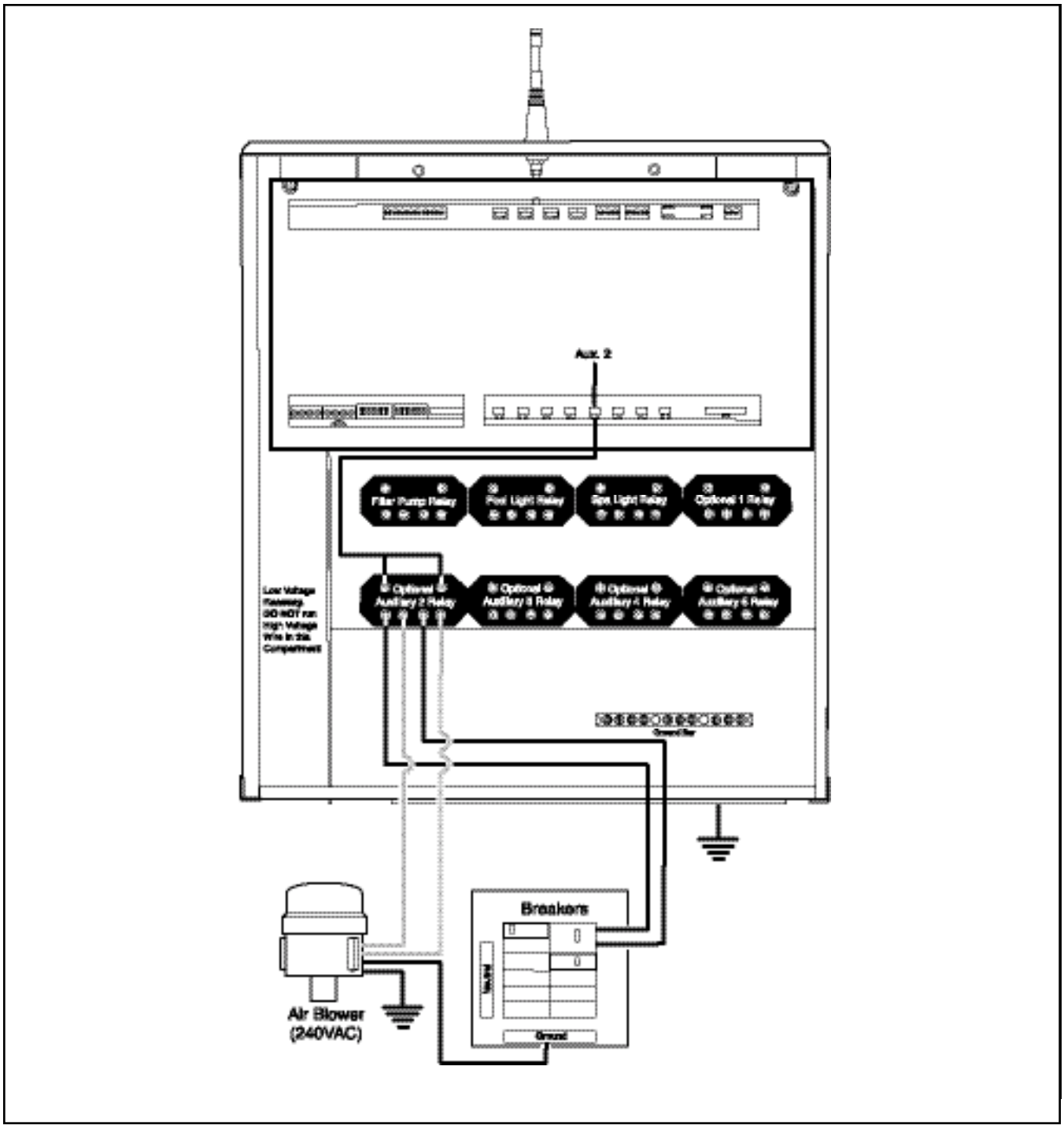

Blower Wiring

1. Ensure that equipment motors have built-in thermal protection.
2. Pull wire sized appropriately for each piece of equipment from the equipment to the enclosure.
3. Each piece of equipment requires its own high voltage relay. If one relay is to be used for several pieces of equipment, verify that the total current draw of all equipment does not exceed the current rating of the circuit.
4. Connect the 120V wires to the transformer wires.
5. Connect the equipment grounds.
6. A green colored terminal or a terminal marked G, GR, Ground, Grounding, or ⏚ is located inside the supply terminal box or compartment. To reduce the risk of electric shock, this terminal must be connected to the ground means in the electric supply service panel with a continuous copper No. 8 AWG bare, covered or insulated wire per NEC Article 250-122.
7. A bonding lug is provided on the external surface of the supply terminal box or compartment. To reduce the risk of electric shock, connect the local common bonding grid in the area of the pool or spa to this terminal with an insulated or bare copper conductor not smaller than No. 6 AWG.
8. Wire the relay of the equipment being used, installing additional relays when necessary.

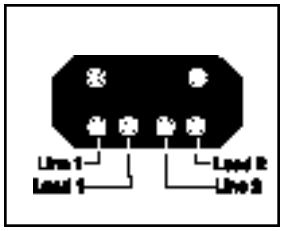

9. For each 240 V rated equipment: Wire the line power to the two line terminals of a relay and wire the equipment to the two load terminals.
10. For each 120 V rated equipment: Wire power to a line terminal and the equipment to an adjacent load terminal.
11. Feed the relay plugs through the holes into the low voltage compartment.

Contact Ratings - Not to Exceed

Standard Relay:	3 H.P. at 240 VAC 1.5 H.P at 120 VAC 25 Amps 1500 Watts

IMPORTANT: Do not turn on electrical power until all high voltage and low voltage connections have been made. Failure to follow this precaution can result in permanent damage to the command center, transformer or circuit board.

Note: All electrical equipment must be five feet or more from the pool/spa and comply with all national, state and local codes.

2.15 Jet Pump Wiring

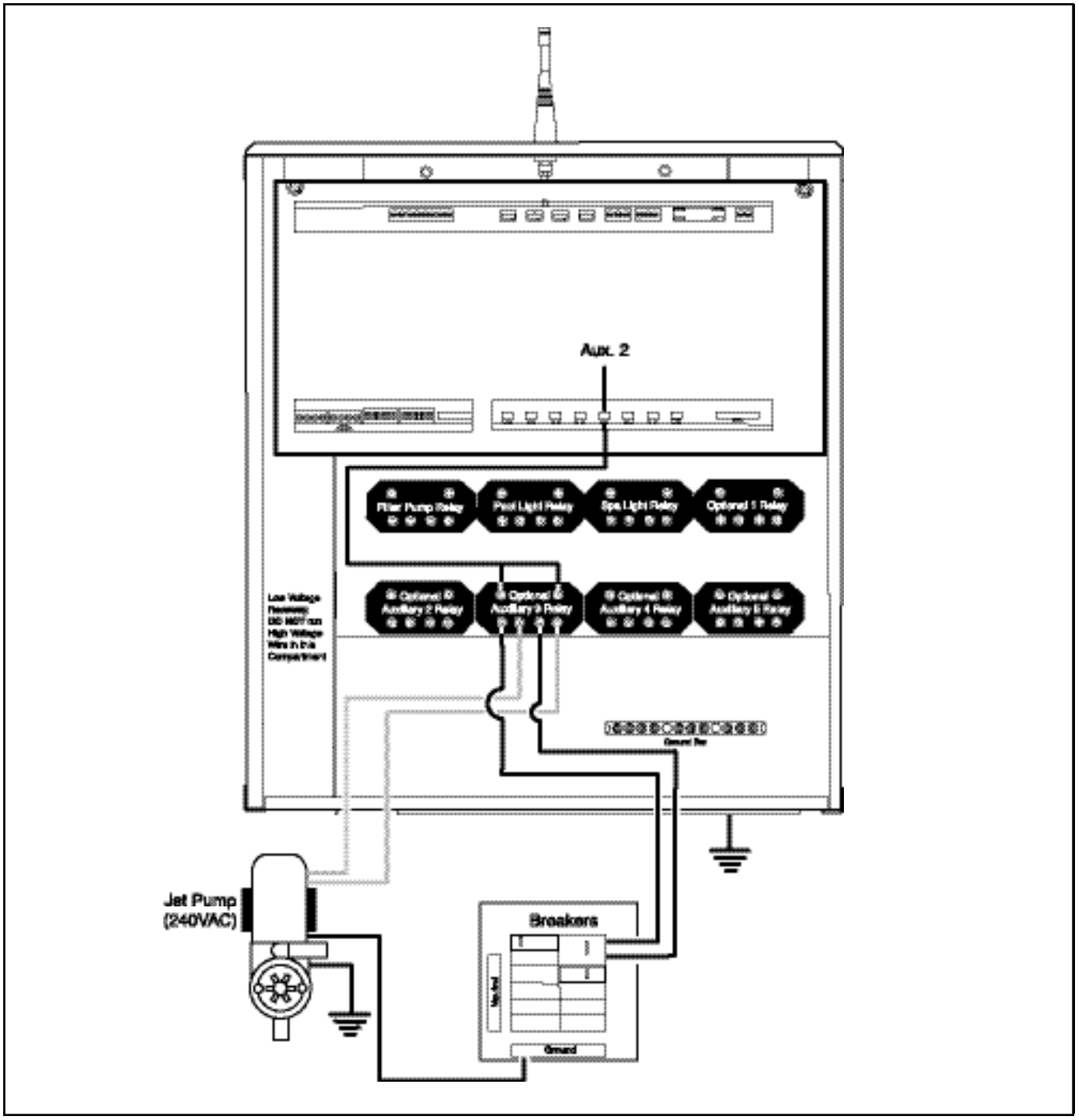

Jet Pump Wiring

1. Ensure that equipment motors have built-in thermal protection.
2. Pull wire sized appropriately for each piece of equipment from the equipment to the enclosure.
3. Each piece of equipment requires its own high voltage relay. If one relay is to be used for several pieces of equipment, verify that the total current draw of all equipment does not exceed the current rating of the circuit.
4. Connect the 120V wires to the transformer wires.
5. Connect the equipment grounds.
6. A green colored terminal or a terminal marked G, GR, Ground, Grounding, or ⏚ is located inside the supply terminal box or compartment. To reduce the risk of electric shock, this terminal must be connected to the ground means in the electric supply service panel with a continuous copper No. 8 AWG bare, covered or insulated wire per NEC Article 250-122.
7. A bonding lug is provided on the external surface of the supply terminal box or compartment. To reduce the risk of electric shock, connect the local common bonding grid in the area of the pool or spa to this terminal with an insulated or bare copper conductor not smaller than No. 6 AWG.
8. Wire the relay of the equipment being used, installing additional relays when necessary.

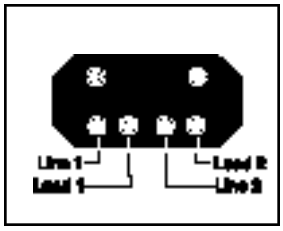

9. For each 240 V rated equipment: Wire the line power to the two line terminals of a relay and wire the equipment to the two load terminals.
10. For each 120 V rated equipment: Wire power to a line terminal and the equipment to an adjacent load terminal.
11. Feed the relay plugs through the holes into the low voltage compartment.

Contact Ratings - Not to Exceed

Standard Relay:	3 H.P. at 240 VAC 1.5 H.P at 120 VAC 25 Amps 1500 Watts

IMPORTANT: Do not turn on electrical power until all high voltage and low voltage connections have been made. Failure to follow this precaution can result in permanent damage to the command center, transformer or circuit board.

Note: All electrical equipment must be five feet or more from the pool/spa and comply with all national, state and local codes.

2.16 Water Feature Pump Wiring

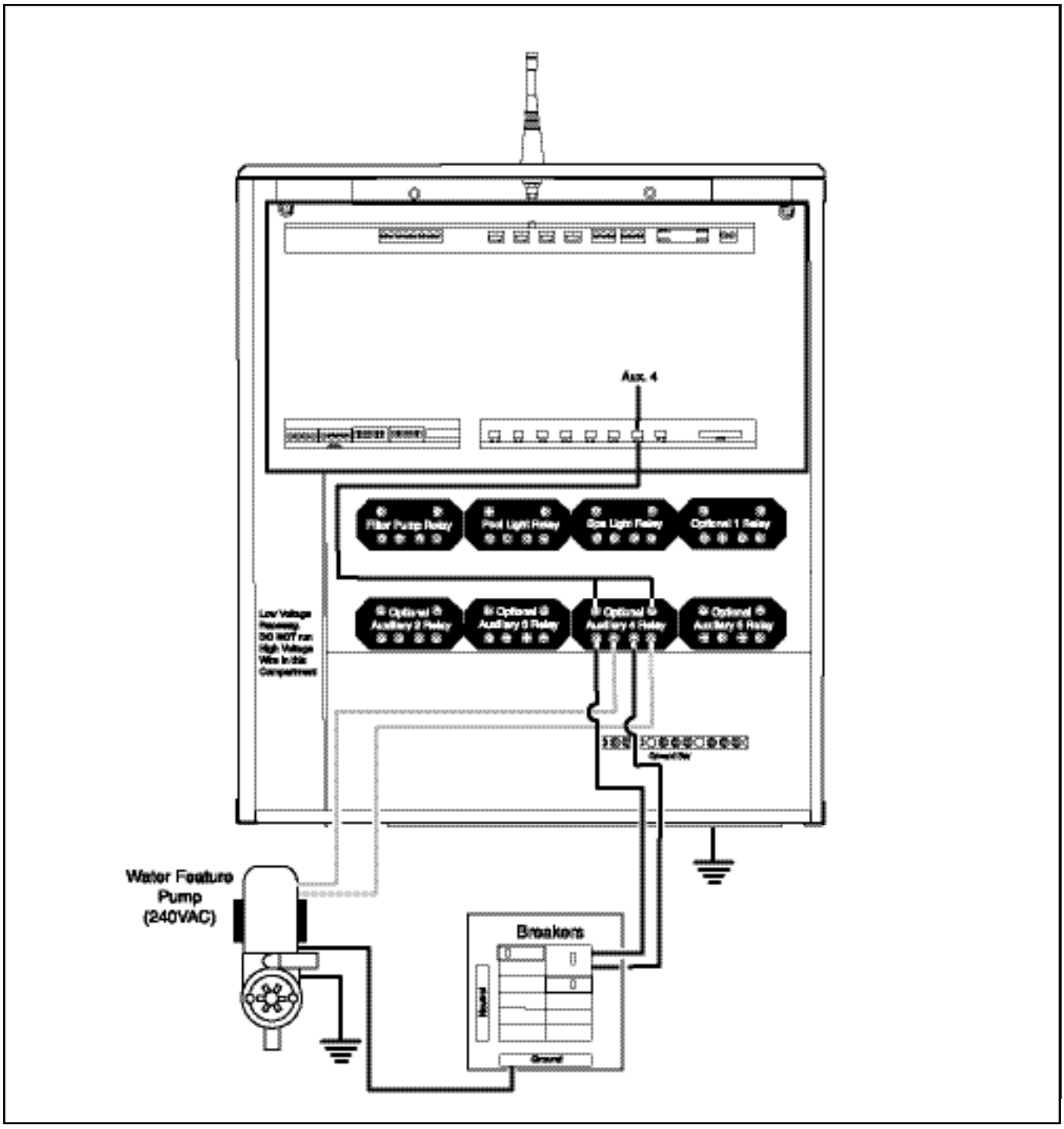

Water Feature Pump Wiring

1. Ensure that equipment motors have built-in thermal protection.
2. Pull wire sized appropriately for each piece of equipment from the equipment to the enclosure.
3. Each piece of equipment requires its own high voltage relay. If one relay is to be used for several pieces of equipment, verify that the total current draw of all equipment does not exceed the current rating of the circuit.
4. Connect the 120V wires to the transformer wires.
5. Connect the equipment grounds.
6. A green colored terminal or a terminal marked G, GR, Ground, Grounding, or ⏚ is located inside the supply terminal box or compartment. To reduce the risk of electric shock, this terminal must be connected to the ground means in the electric supply service panel with a continuous copper No. 8 AWG bare, covered or insulated wire per NEC Article 250-122.
7. A bonding lug is provided on the external surface of the supply terminal box or compartment. To reduce the risk of electric shock, connect the local common bonding grid in the area of the pool or spa to this terminal with an insulated or bare copper conductor not smaller than No. 6 AWG.
8. Wire the relay of the equipment being used, installing additional relays when necessary.

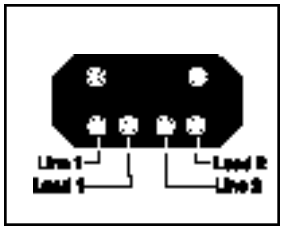

9. For each 240 V rated equipment: Wire the line power to the two line terminals of a relay and wire the equipment to the two load terminals.
10. For each 120 V rated equipment: Wire power to a line terminal and the equipment to an adjacent load terminal.
11. Feed the relay plugs through the holes into the low voltage compartment.

Contact Ratings - Not to Exceed

Standard Relay:	3 H.P. at 240 VAC 1.5 H.P at 120 VAC 25 Amps 1500 Watts

IMPORTANT: Do not turn on electrical power until all high voltage and low voltage connections have been made. Failure to follow this precaution can result in permanent damage to the command center, transformer or circuit board.

Note: All electrical equipment must be five feet or more from the pool/spa and comply with all national, state and local codes.

2.17 Suction Valve Installation

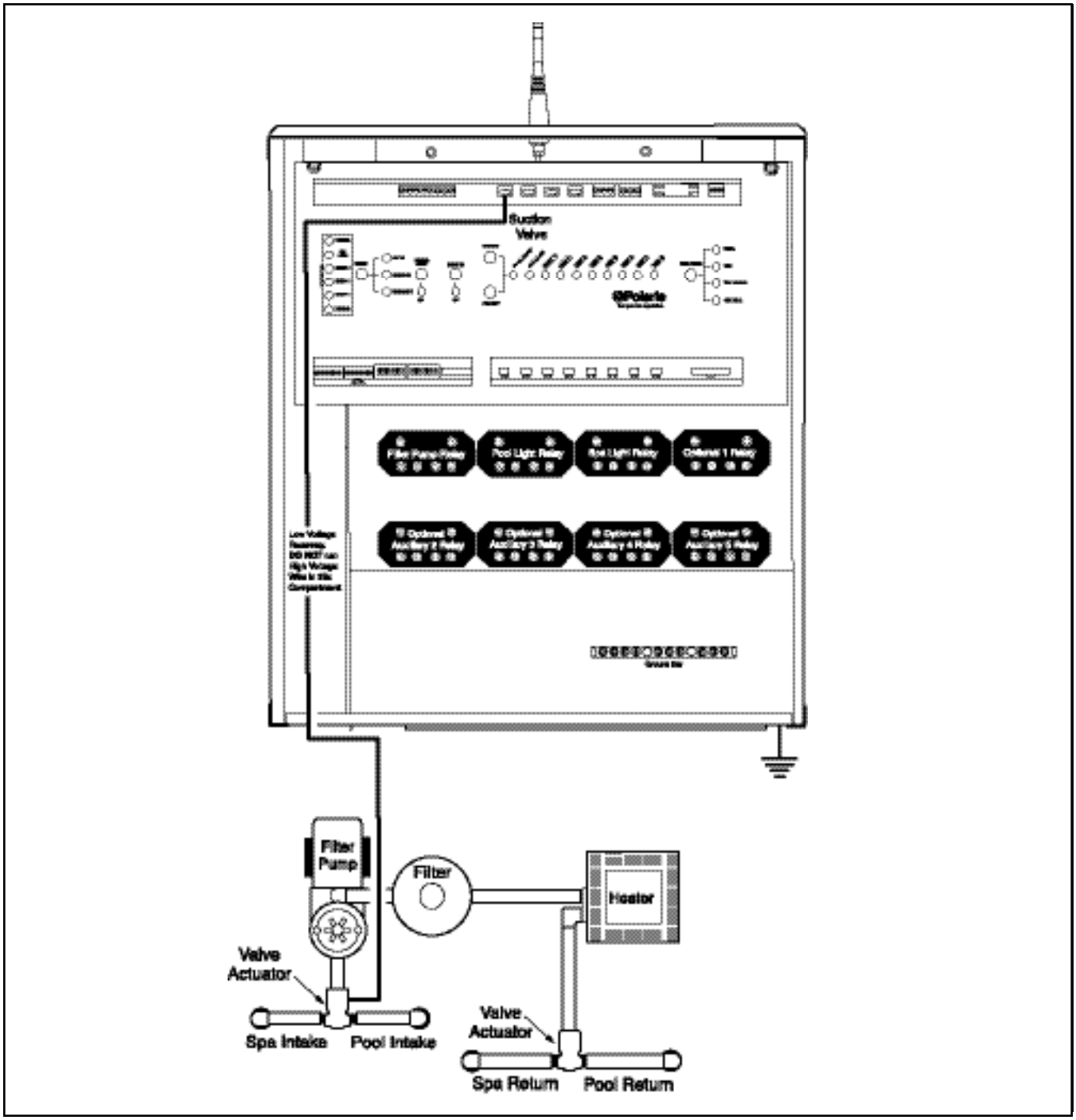

Suction Valve Actuators Installation

Do not coil the valve actuator cable inside the command center. Run the valve actuator wires back to the low voltage compartment of the command center, through the low voltage raceway, and plug them into their sockets.

Ensure that the suction valve actuator plugs into the "SUCTION VALVE" socket.

Actuator Installation Instructions

1. Remove the knob, handle and four screws from the valve cover.
2. Align the splines of the valve actuator shaft over shaft of valve.
3. If the valve actuator is not aligned with the mounting holes on the valve cover, rotate the valve actuator.
4. Use the four mounting screws provided to mount the valve actuator to the valve cover.
5. Mount the valve handle and knob to the valve actuator.
6. Connect the cord into the command center circuit board at the appropriate valve actuator socket.
7. If the valve rotates to the wrong position (180 degrees out of phase), adjust the switch on the back of the valve actuator between the ON 1 and ON 2 position. This will rotate the valve to the correct position.
8. Refer to Actuator Valve Adjustment, section 2.22 to change cam positions.

2.18 Return Valve Installation

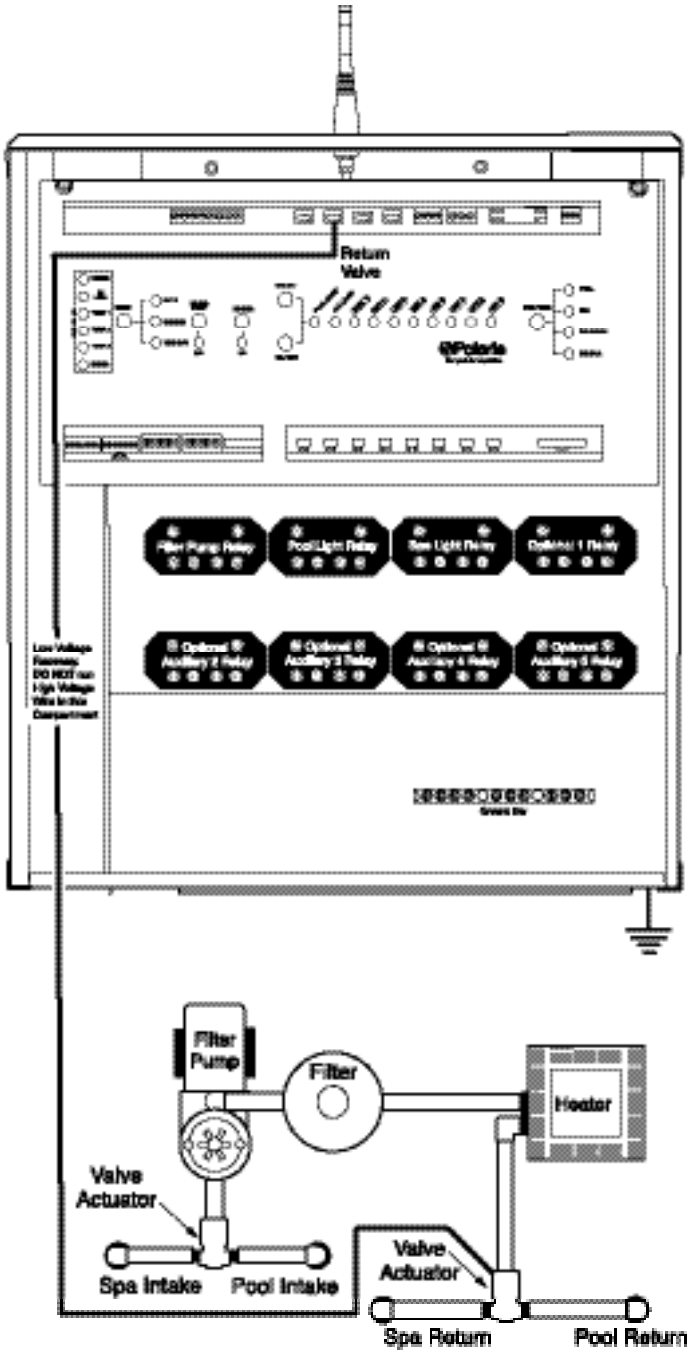

Return Valve Actuators Installation

Do not coil the valve actuator cable inside the command center. Run the valve actuator wires back to the low voltage compartment of the command center, through the low voltage raceway, and plug them into their sockets.

Ensure that the return valve actuator plugs into the "RETURN VALVE" socket.

Actuator Installation Instructions

1. Remove the knob, handle and four screws from the valve cover.
2. Align the splines of the valve actuator shaft over shaft of valve.
3. If the valve actuator is not aligned with the mounting holes on the valve cover, rotate the valve actuator.
4. Use the four mounting screws provided to mount the valve actuator to the valve cover.
5. Mount the valve handle and knob to the valve actuator.
6. Connect the cord into the command center circuit board at the appropriate valve actuator socket.
7. If the valve rotates to the wrong position (180 degrees out of phase), adjust the switch on the back of the valve actuator between the ON 1 and ON 2 position. This will rotate the valve to the correct position.
8. Refer to Actuator Valve Adjustment, section 2.22 to change cam positions.

2.19 Water Feature Valve Installation

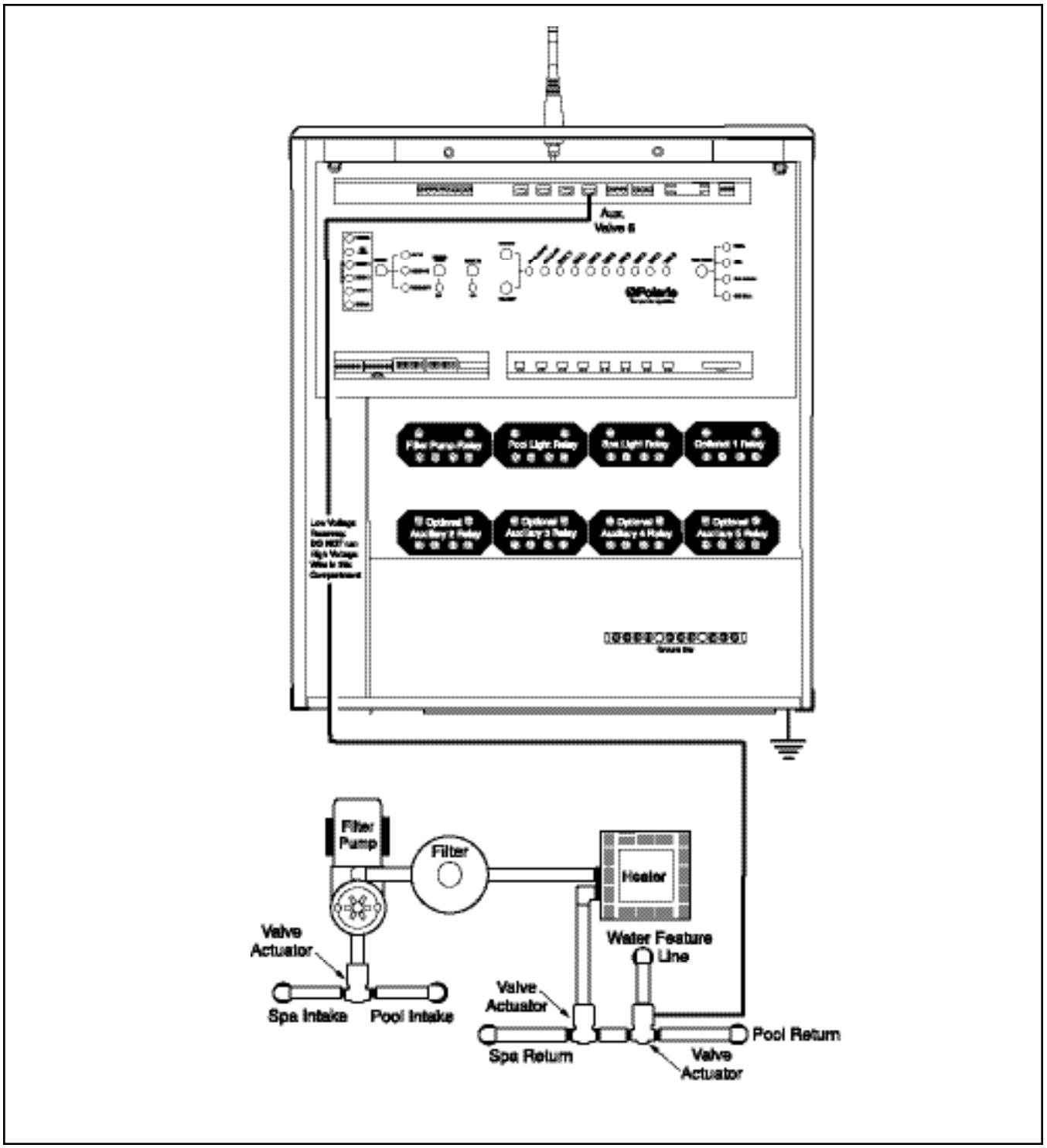

Water Feature Valve Actuators Installation

Do not coil the valve actuator cable inside the command center. Run the valve actuator wires back to the low voltage compartment of the command center, through the low voltage raceway, and plug them into their sockets.

- Plug the actuator plug into “AUX 7” or “AUX 8” socket.
- Use the “AUX 8” socket if the actuator needs to close when the spa is activated or if a solar system valve is used on “AUX7”.

Actuator Installation Instructions

1. Remove the knob, handle and four screws from the valve cover.
2. Align the splines of the valve actuator shaft over shaft of valve.
3. If the valve actuator is not aligned with the mounting holes on the valve cover, rotate the valve actuator.
4. Use the four mounting screws provided to mount the valve actuator to the valve cover.
5. Mount the valve handle and knob to the valve actuator.
6. Connect the cord into the command center circuit board at the appropriate valve actuator socket.
7. If the valve rotates to the wrong position (180 degrees out of phase), adjust the switch on the back of the valve actuator between the ON 1 and ON 2 position. This will rotate the valve to the correct position.
8. Adjust water flow to water feature by adjusting Actuator cam position.
9. Refer to Actuator Valve Adjustment, section 2.22 to change cam positions.

2.20 Suction Cleaner Valve Installation

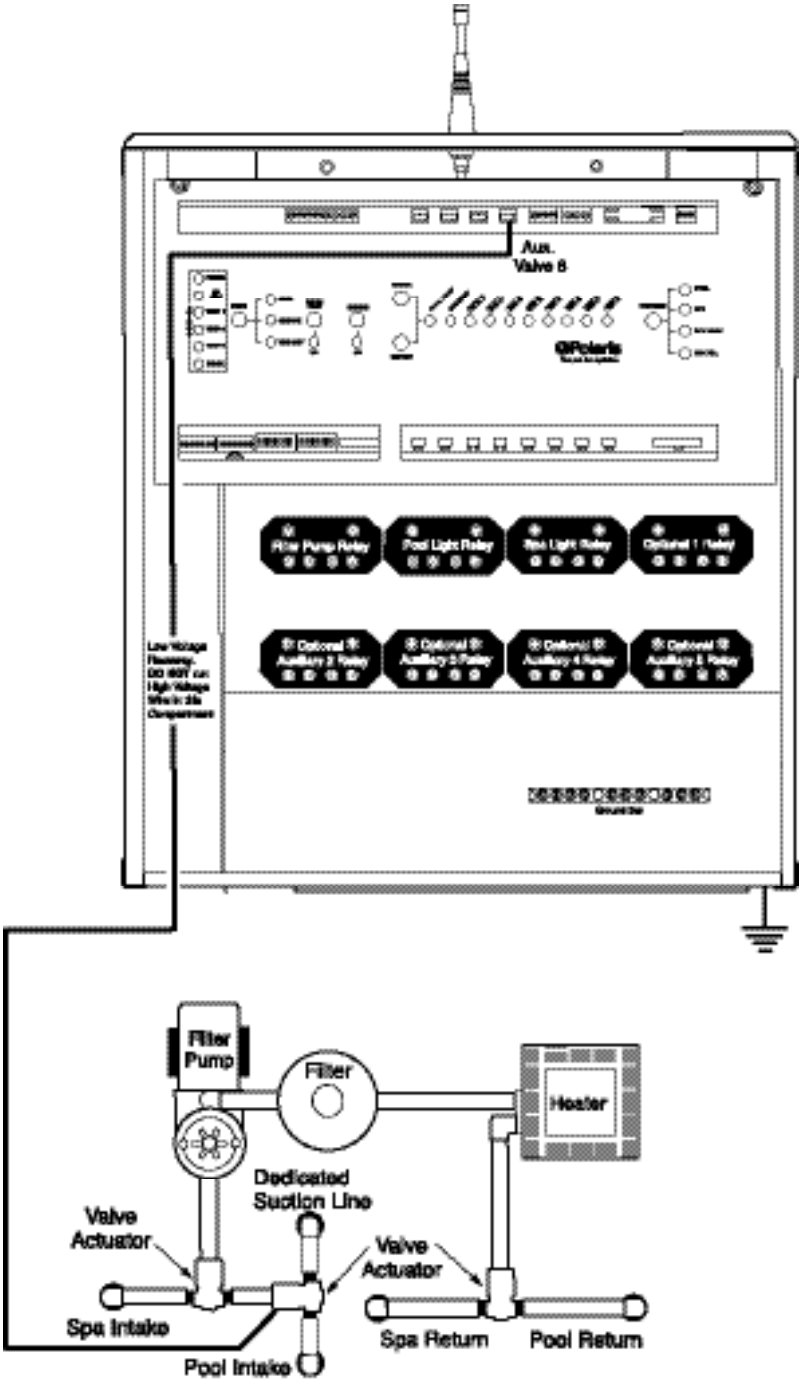

Suction Cleaner Valve Actuators Installation

Do not coil the valve actuator cable inside the command center. Run the valve actuator wires back to the low voltage compartment of the command center, through the low voltage raceway, and plug them into their sockets.

- Plug the actuator plug into “AUX 7” or “AUX 8” socket.
- Use the “AUX 8” socket if the actuator needs to close when the spa is activated or if a solar system valve is used on “AUX7”.

Actuator Installation Instructions

1. Remove the knob, handle and four screws from the valve cover.
2. Align the splines of the valve actuator shaft over shaft of valve.
3. If the valve actuator is not aligned with the mounting holes on the valve cover, rotate the valve actuator.
4. Use the four mounting screws provided to mount the valve actuator to the valve cover.
5. Mount the valve handle and knob to the valve actuator.
6. Connect the cord into the command center circuit board at the appropriate valve actuator socket.
7. If the valve rotates to the wrong position (180 degrees out of phase), adjust the switch on the back of the valve actuator between the ON 1 and ON 2 position. This will rotate the valve to the correct position.
8. Adjust suction to cleaner by adjusting Actuator cam position.
9. Refer to Actuator Valve Adjustment, section 2.22 to change cam positions.

2.21 Pressure Cleaner Valve Installation

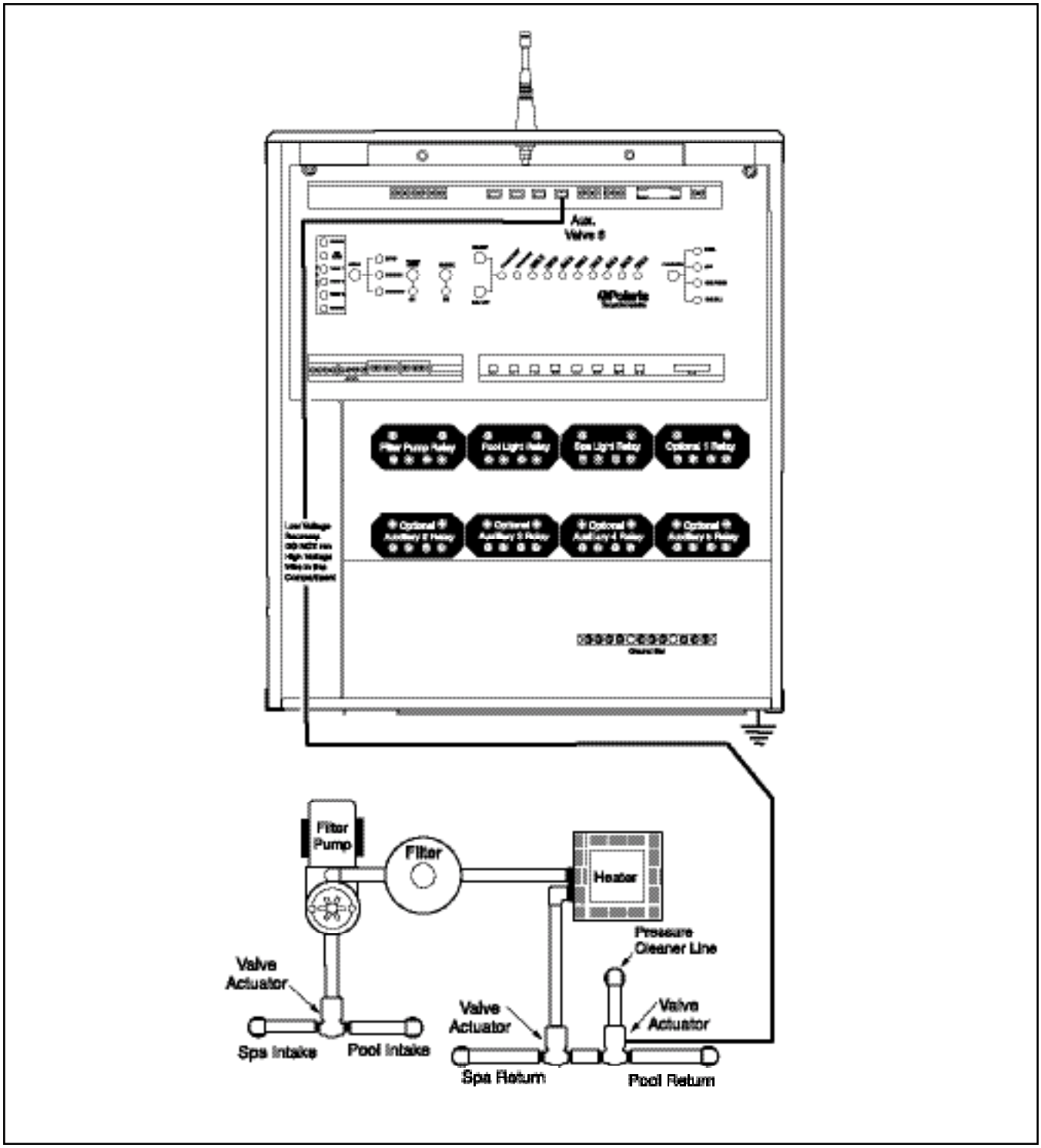

Pressure Cleaner Valve Actuators Installation

Do not coil the valve actuator cable inside the command center. Run the valve actuator wires back to the low voltage compartment of the command center, through the low voltage raceway, and plug them into their sockets.

- Plug the actuator plug into “AUX 7” or “AUX 8” socket.
- Use the “AUX 8” socket if the actuator needs to close when the spa is activated or if a solar system valve is used on “AUX7”.

Actuator Installation Instructions

1. Remove the knob, handle and four screws from the valve cover.
2. Align the splines of the valve actuator shaft over shaft of valve.
3. If the valve actuator is not aligned with the mounting holes on the valve cover, rotate the valve actuator.
4. Use the four mounting screws provided to mount the valve actuator to the valve cover.
5. Mount the valve handle and knob to the valve actuator.
6. Connect the cord into the command center circuit board at the appropriate valve actuator socket.
7. If the valve rotates to the wrong position (180 degrees out of phase), adjust the switch on the back of the valve actuator between the ON 1 and ON 2 position. This will rotate the valve to the correct position.
8. Adjust the water flow to cleaner by adjusting Actuator cam position.
9. Refer to Actuator Valve Adjustment, section 2.22 to change cam positions.

2.22 Actuator Valve Adjustments

Specifications

Voltage:	24 VAC
Amps:	0.65
Torque:	250 inch pounds
Size:	L 7.5”, H 4.75”, W 4.25”
Material:	Housing - Noryl:
	Gears - steel
Grease:	MoS2 Lubricant
Cord Length:	15’
Rated:	Outdoor use

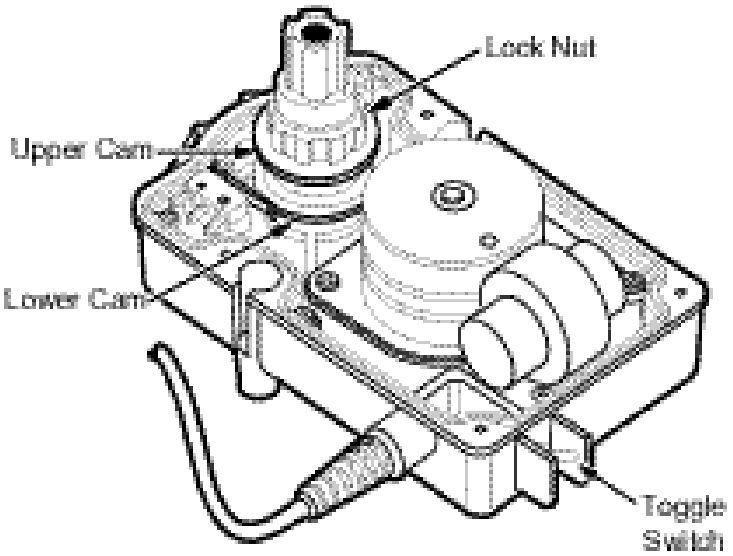

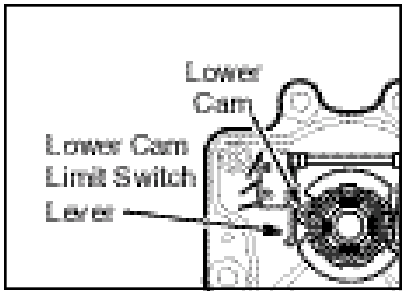

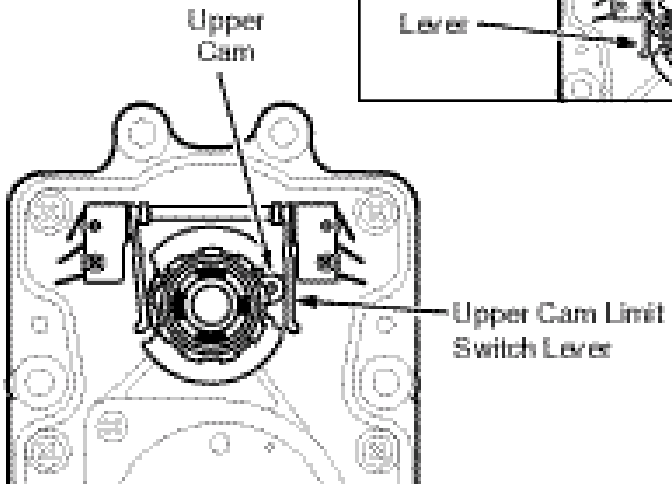

Actuator Valve Adjustments

Most installations do not require adjusting the valve actuator unless a bypass is desired or the flow needs to be redirected.

1. Remove the valve actuator cover.
2. Unplug the cord from the command center circuit board.
3. Loosen the lock nut with a pair of pliers (this allows moving the adjustment cams).
4. To change the clockwise stop point of the valve actuator, turn the upper cam to the desired position. To change the counterclockwise stop point, turn the lower cam to the desired position.
5. Tighten the lock nut.
6. Reconnect the cord into the command center circuit base.
7. Using the toggle switch on the back of the valve actuator switch to the ON 1 and ON 2 positions to verify that the new adjustment is correct.
8. Repeats steps 2-6 if further adjustment is required.
9. Replace the valve actuator cover.

2.23 Temperature Sensor Installation

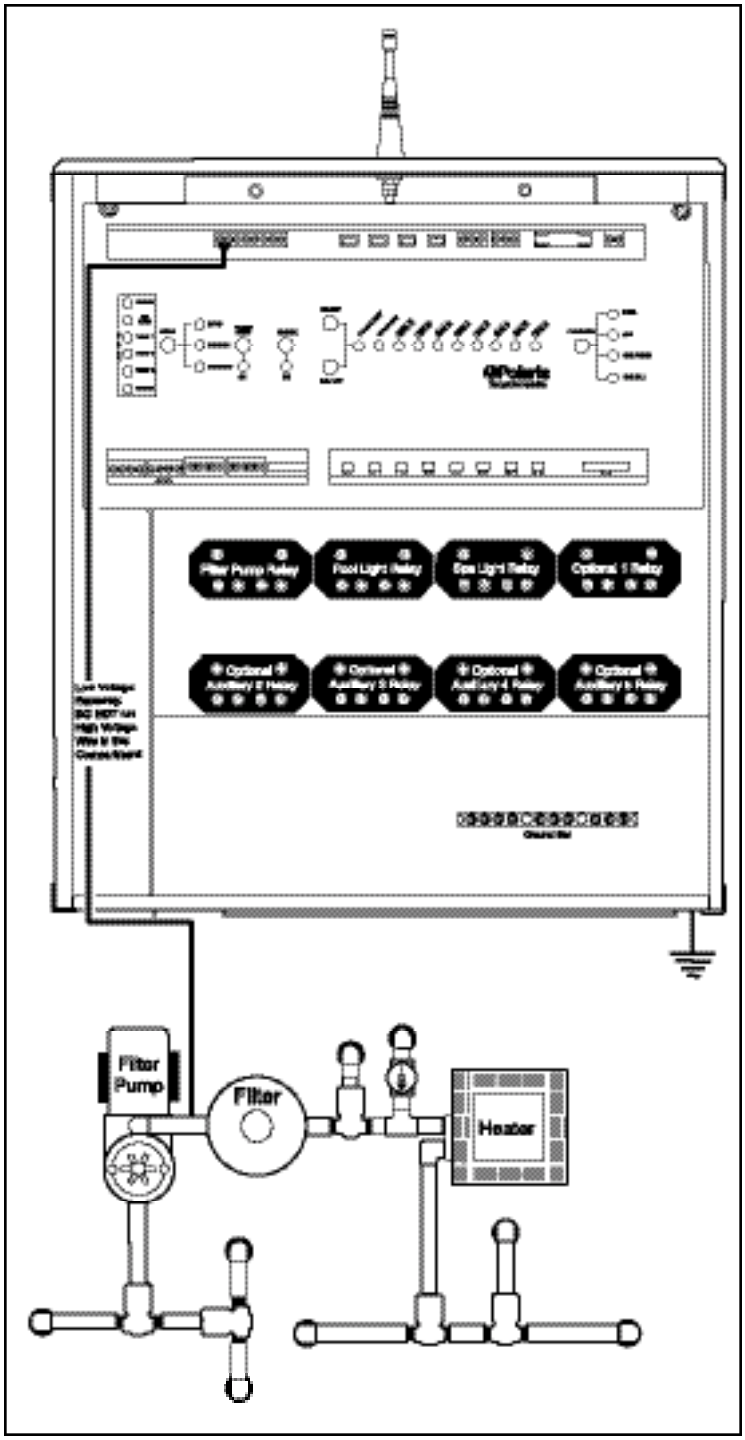

2.24.1 Water Temperature Sensor

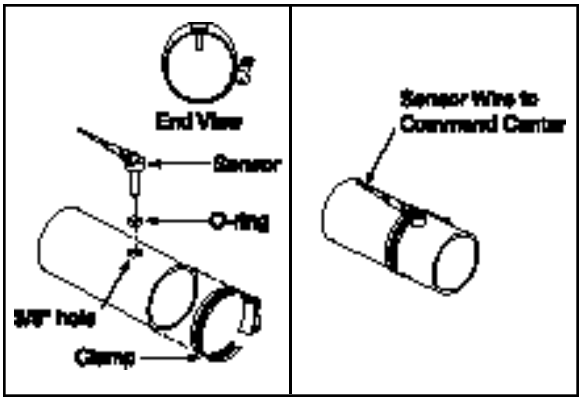

2.24.2 Air Temperature Sensor

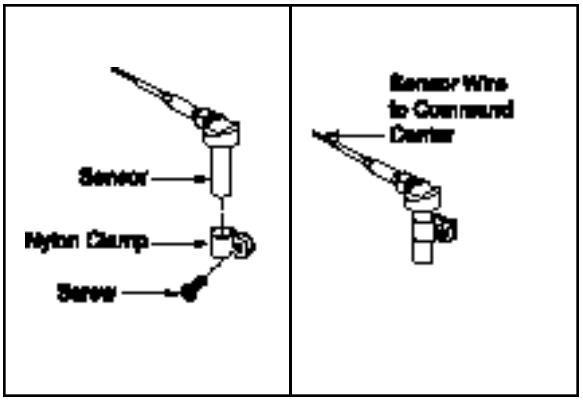

2.24.3 Solar Temperature Sensor

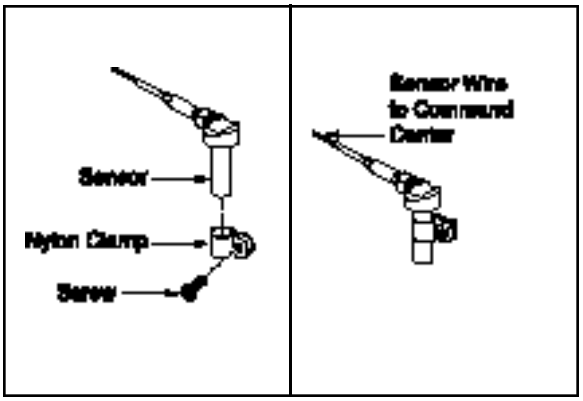

2.23 Temperature Sensor Installation

Connect the temperature sensors to the appropriate terminals on the command center circuit board.

Water Temperature Sensor - Drill a 3/8" hole in the pipe between the filter pump and the filter. Insert the sensor and use the provided clamp to hold it in place. Verify that the O-ring is securely placed around the sensor to ensure a watertight seal. Connect the sensor wires to the 6-pin terminal bar on the circuit board at the position marked "WATER TEMP".

Freeze/Ambient Air Temperature Sensor - Install the sensor outside of the command center in an area where it will be subjected to shaded air temperature, but not to direct sunlight. Connect the sensor wires to the 6-pin terminal bar on the circuit board at the location marked "AIR TEMP".

Solar Temperature Sensor (optional) - If there is a solar system, install the solar sensor adjacent to the solar panels. Connect the sensor wires to the 6-pin terminal bar on the circuit board at the location marked "SOLAR TEMP".

2.24 Low Voltage Accessory Installation

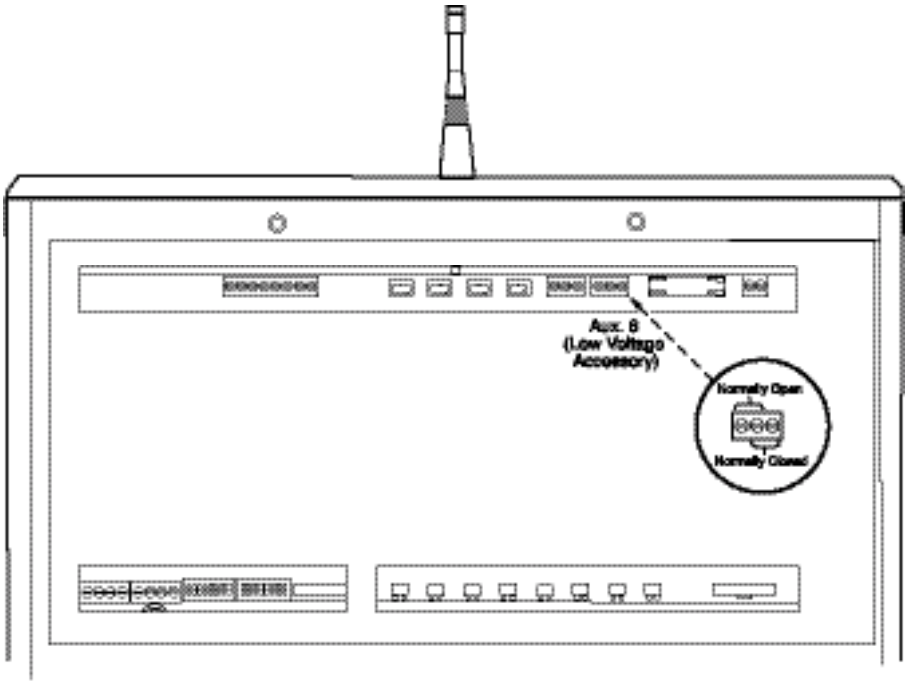

2.24 Low Voltage Accessory Installation

To connect any low voltage (24 V or less) auxiliaries (such as landscape lighting), plug the transformer into any standard 120 V wall outlet. Cut one wire on the secondary side of the transformer and connect a length of 22 AWG wire to each end of the newly cut wires. Run the 22 AWG wires into the command center through the low voltage raceway and connect them to the 3-pin terminal bar on the circuit board labeled "LOW VOLT AUX" (see the wiring diagram on page 16 or on the inside of the command center door). If the transformer for the lights includes an integrated timer, the trippers must be removed and the unit must be turned on.

1. Use the 3-pin terminal bar in a normally open (the connection will be open to the auxiliary until the relay is energized) or a normally closed (the connection will be closed to the auxiliary until the relay is energized) configuration.
2. Connect the wires from the auxiliary to the left and center positions of the terminal bar to turn on the auxiliary when the relay is energized.(Normally open.)
3. Connect the wires from the auxiliary to the center and right positions of the terminal bar to turn off a piece of equipment when the relay is energized. (Normally closed.)

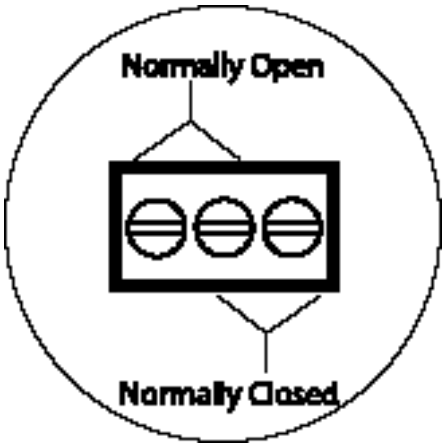

2.25 Charger Base Installation

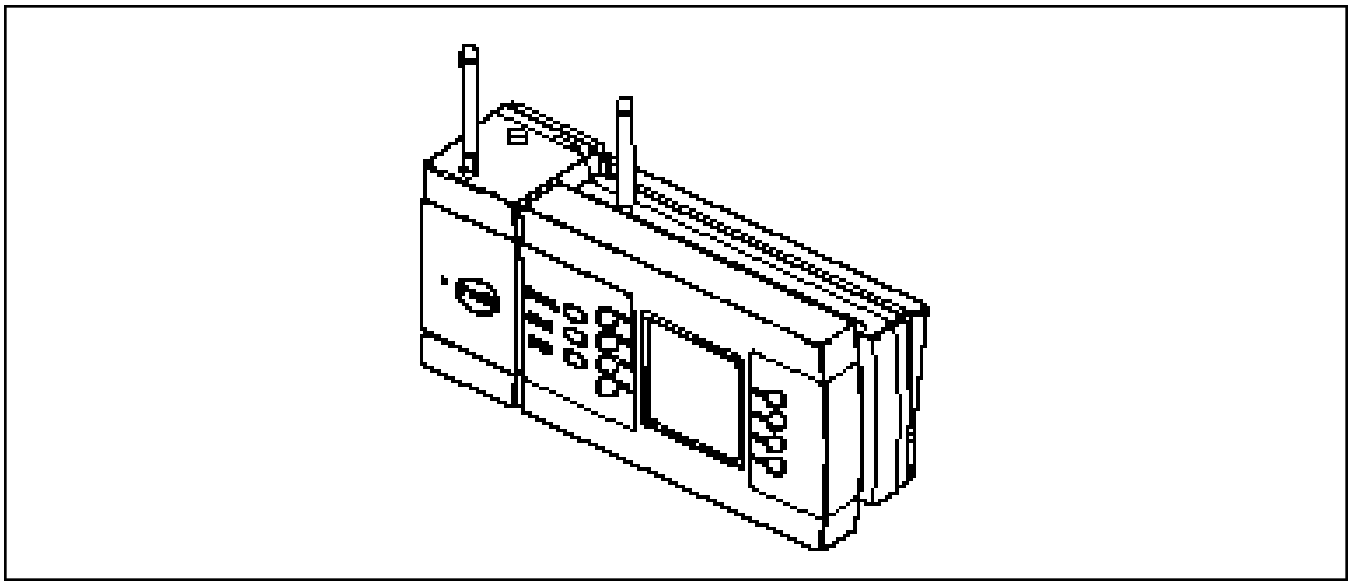

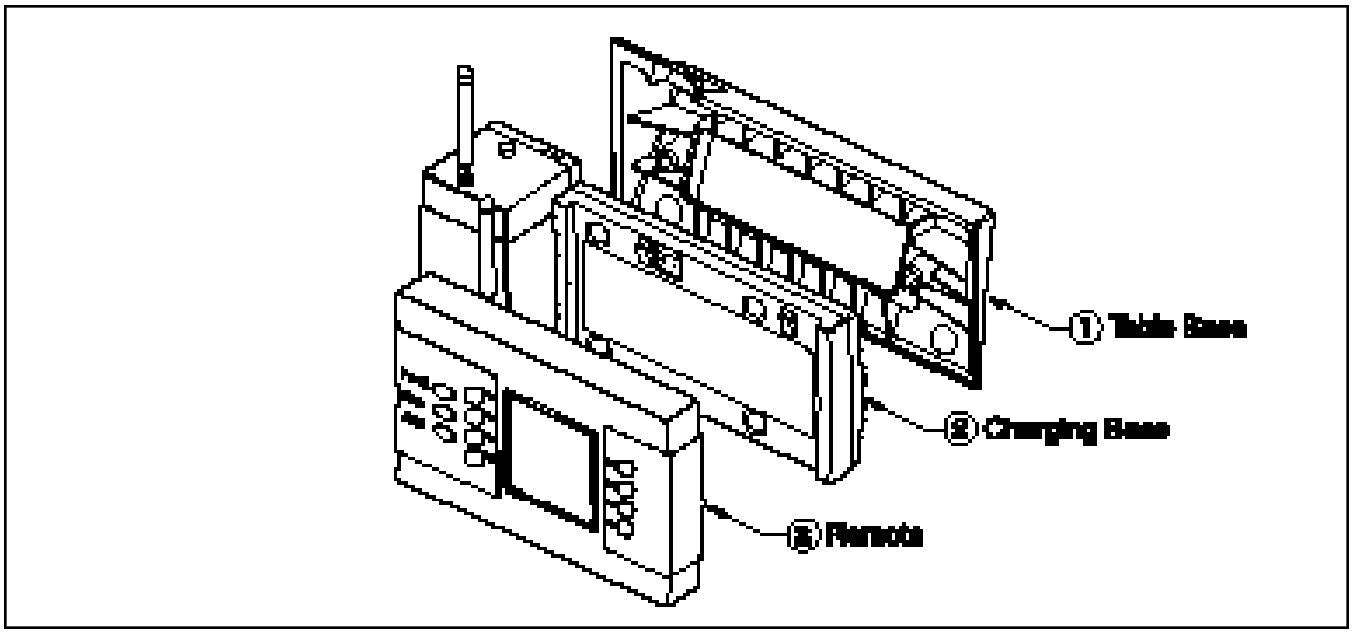

Angled Table Base
Choose a table or counter located inside the house or other weather protected area near a 120 volt electrical outlet. Plug the 9 volt wall transformer into the outlet.

Wall Mount
Unscrew the two screws that hold the table base to the charging base and remove the table base. Position the charging base at the desired wall location and mark the mounting holes on the wall. Drill holes at the marked location, using the appropriate drill bits for the mounting hardware selected. Plastic wall anchors should be used to prevent the screws from pulling out of the wall. Plug in the transformer.

Hardwiring the Charging Base
It is possible to hardwire the charging base to the command center. this will allow the remote to communicate with either the command center or base, whichever is closest. A Sol control cable must be used for the hardwire process. It has a phone type plug on one end and free wires on the other end.

1. Use electrical conduit to protect the control cable as it runs under ground or through concrete.
2. Cut the phone connector from the control cable end that connects to the Command Center.
3. Plug the wire into the rear of the charging base.
4. Connect the wires to the 4 position terminal bar on the "Command Center" PCB labeled "External Devices." Pin 1 is on the left and Pin 4 is on the right.

Pin 1:	Black	Pin 2:	Red
Pin 3:	Green	Pin 4:	Yellow

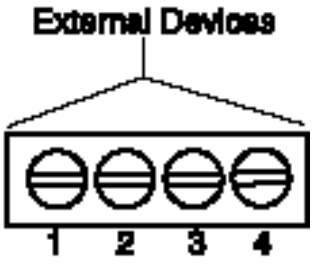

2.26 Remote Control Battery Installation & Replacement

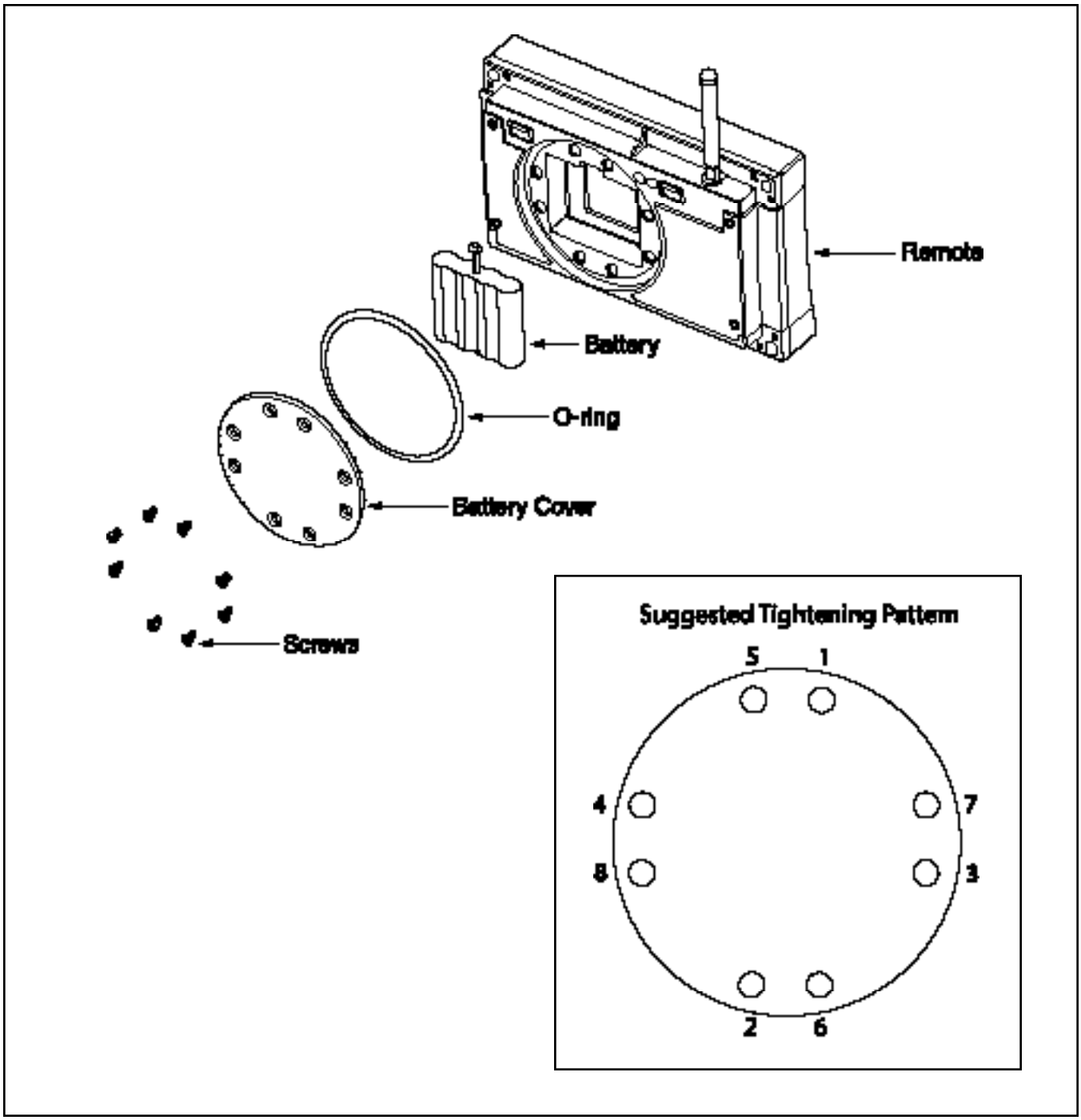

Hand-held Remote Battery Installation

The battery, battery cover, O-ring, and screws are all packaged with the remote.

1. Connect the battery to the remote control unit.
2. Place the O-ring around the battery cover. Install the battery cover and O-ring onto the back of the remote. Verify that the O-ring does not move and is not pinched between the cover and remote, or the remote will not be water resistant.
3. Secure the battery cover with the provided screws and tighten them evenly, but do not overtighten.

   Note: Once the useful battery life has been depleted, it will be necessary to replace the battery. You can expect the battery to last between 3 and 5 years, but actual battery life will depend on the number of charging cycles completed. A Polaris battery (part number S-35) must be used with the remote control unit. When replacing the battery, always replace the O-ring at the same time. The O-ring will deteriorate with age and wear which can compromise the water resistance. Even a small flaw in the O-ring can be enough to allow water to enter the remote.

2.27 Remote Control Battery Charging

2.27 Remote Control Battery Charging

The battery will require charging before use. Charge the battery for at least 15 hours before use. With a full charge, the remote is able to operate for up to 2 days (depending on the amount of usage). We recommend the remote to be placed on the charging base at the end of the day to ensure a full charge for the next use. Always verify that the remote is sitting squarely on the charging base so that it will properly charge. It is normal for the battery to discharge when not in use.

2.28 Command Center Backup Battery Installation

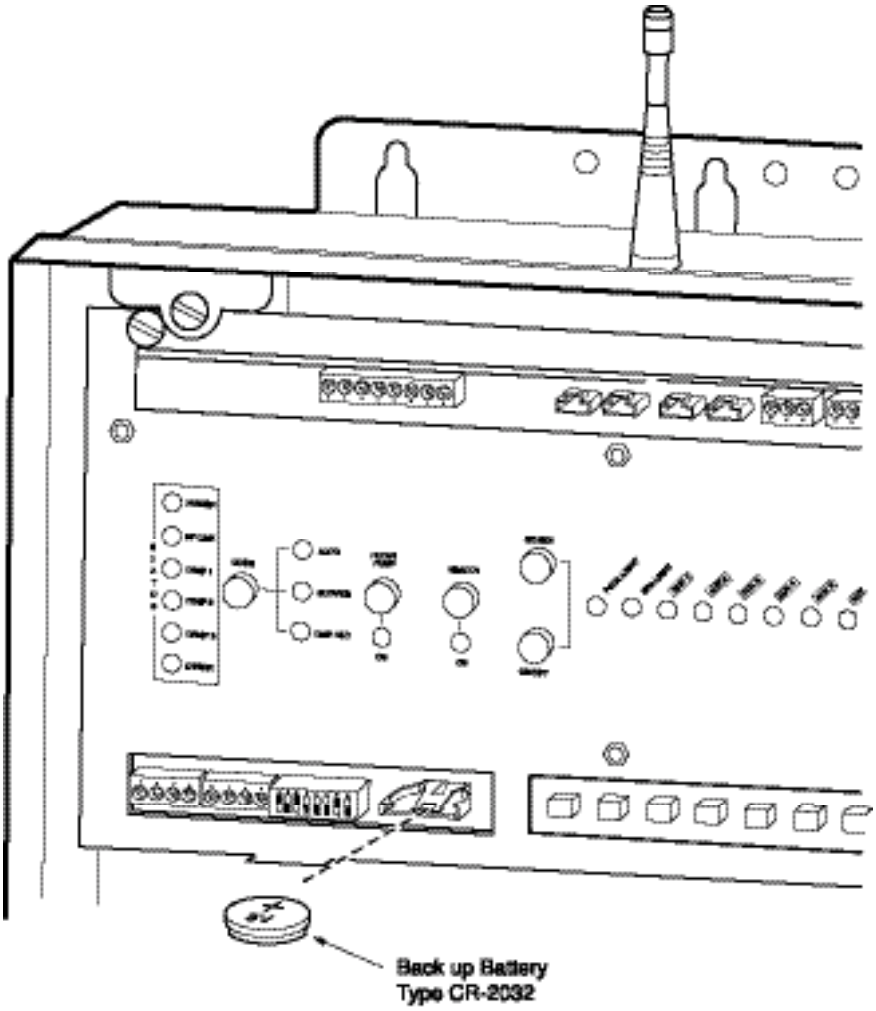

Replacing the back up battery

1. Turn power off to the controller and accessories by turning the circuit breakers protecting the equipment.
2. Remove the front panel to gain access to the battery.
3. Remove the battery and replace with a new one (CR-2032) making sure the positive side of the battery is installed facing up.
4. Replace the front panel.
5. Restore power to the controller and all accessories by turning the circuit breakers on.
6. Using the remote control, set the current time and date so that the schedules will resume.

3.1 DIP Switch Settings

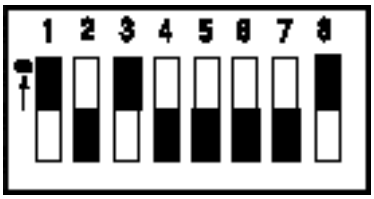

The ON position is shown with the black area facing upward.

Bank 1 DIP Switch Settings

DIP Switch	ON	OFF	Factory Setting
1	Booster Pump	Aux 1	On
2	Recirculation Pump	Aux 2	Off
3	Pump protect position	Pump protect pool only	On
4	Blower	No Blower	Off
5	Blower w/booster pump	Blower w/o booster pump	Off
6	Aux. valve 2 closes when spa is activated	Aux. valve 2 independent of spa	Off
7	Pillar Optic Lighting	Reg. Pool Lights	Off
8	Retain memory at power failure	Reset memory at power up	On

The DIP switches set operation parameters and define the external equipment the command center controls.The Sol 1000 comes with two banks of DIP switches, Bank 1 and Bank 2.

BANK 1

DIP Switch 1: (ON = Booster Pump Cleaner, OFF = Auxiliary 1)

If there is a booster pump cleaner installed, the DIP switch should be in the ON position.

If the DIP switch is set to the ON position:

- The <CLEANER> choice will be activated in the pool menu;
- The main circulation pump will turn on whenever the booster pump cleaner is turned on;
- The cleaner prime delay will prevent the booster pump from turning on until the main circulation pump has been on for 30 seconds;
- The cleaner turns off and access is disabled when the spa is enabled or when spillover is enabled;
- The booster pump turns off for four minutes when solar heat is enabled to allow air to be purged from solar collectors.

If the DIP switch is set to the OFF position: Auxiliary 1 will be active from the AUX menu and <CLEANER> will not appear in the pool options.

DIP Switch 2: (ON = Blower or Jet Pump, OFF = Auxiliary 2)

If there is a blower or a jet pump installed on the spa, the DIP switch should be in the ON position.

If the DIP switch is set to the ON position:

- The <BLOWER> choice will be activated in the Spa menu.

  <AIR JETS> will become an option in the spa options and in the AUX menu.

If the DIP switch is set to the OFF position, the Auxiliary 2 choice is activated.

- If a spa light, blower and jet pump are installed on the same spa, use the DIP switch and the Auxiliary 2 relay to access one piece of equipment from the spa menu.

DIP Switch 3: (ON = Freeze Protect Pool/Spa, OFF = Freeze Protect Pool Only)

If the DIP switch is in the ON position, and freeze protection is enabled, the pool and any other selected auxiliaries will be turned ON for 30 minutes, and then water circulation will switch to the spa. This cycle will continue until the ambient temperature rises above the Freeze Protection temperature.

If the DIP switch is in the OFF position, only the pool and selected auxiliaries will be activated when freeze protection is enabled.

3.1 DIP Switch Settings

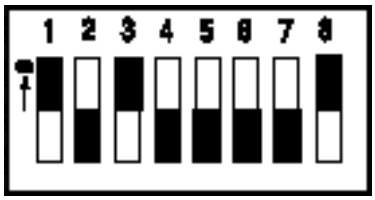

The ON position is shown with the black area facing upward.

Bank 1 DIP Switch Settings

DIP Switch	ON	OFF	Factory Setting
1	Booster Pump	Aux 1	On
2	Blower/Jet Pump	Aux 2	Off
3	Freeze protect positions	Freeze protect pool only	On
4	Solar	No solar	Off
5	Solar w/booster pump	Solar w/o booster pump	Off
6	Aux. valve 2 shares when spa is activated	Aux. valve 2 independent of spa.	Off
7	Fiber Optic Lighting	Reg. Pool Lights	Off
8	Retain memory at power failure	Reset memory at power up	On

NOTE: This DIP switch does not enable freeze protection. This setting only instructs how freeze protection will function when activated. Refer to Owner's Manual for further instruction on how to enable freeze protection or how to assign different equipment to be protected.

DIP Switch 4: (ON = Solar, OFF = No Solar)

If there is solar heat on the pool/spa, turn this switch ON. <SOLAR> will appear as a choice from the Pool menu.

DIP Switch 5: (ON = Solar with Booster Pump, OFF = Solar without Booster Pump)

If there is a booster pump on the solar system, the switch should be in the ON position. The booster pump should be wired to the Auxiliary 3 relay.

If the solar system does not use a booster pump the DIP switch should be in the OFF position.

DIP Switch 6: (ON = AUX) valve 8 closes when spa is activated. (OFF = AUX) valve 8 functions independently of spa).

Turn DIP switch ON to turn off a valve connected to AUX 8 whenever the spa is turned on. You must activate "AUX 8" on the hand-held Remote for this function to operate.

DIP Switch 7: (ON = Fiber Optic Lighting; OFF = Traditional Pool Lighting)

If the DIP switch is in the ON position, the controller will be set to utilize the fiber optic lighting. In place of Pool Light, a menu pick for FIBER will be displayed. Pressing this will allow the user control over the fiber optic illuminators power and color wheel power. The illuminator power must be connected to the POOL LIGHT relay output on the circuit board and the color wheel power must be connected to the SPA LIGHT relay output.

If the DIP switch is in the OFF position, the traditional pool lighting will be used and a POOL LIGHT and SPA LIGHT item will be present in the respective menus for independent control over each light.

3.1 DIP Switch Settings

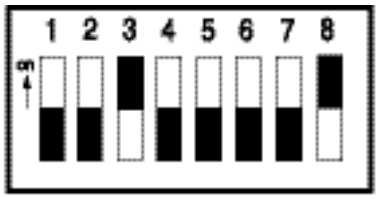

The ON position is shown with the black area facing upward.

Bank 2 DIP Switch Settings

DIP Switch	ON	OFF	Factory Setting
1	Pool only	Pool/Spa combo	Off
2	Dual Speed Pump	Single Speed Pump	Off
3	Allow heating in low speed	Heat in high speed only	Off
4 - 8	Not Used		Off

DIP Switch 8: (ON = Retain Memory at Power Failure; OFF = Reset Memory at Power Up)

- If the user-defined labels and schedules are to be stored in the event of a power outage, this DIP switch should be in the ON position.
- If the labels and schedules are to be erased in the event of a power outage, the switch should be in the OFF position. This feature should be used if it was desired to restore the memory to factory defaults and erase all labels and programs.

BANK 2

DIP Switch 1: (ON = Pool only; OFF = Pool/Spa combination)

If the DIP switch is ON, the controller will be set for a pool only installation and all SPA functions will be disabled.

If the DIP switch is OFF, the controller will be set for a Pool/Spa combination.

DIP Switch 2: (ON = 2 Speed Pump; OFF = 1 Speed Pump)

If the DIP switch is ON, the controller will utilize both speeds of a 2-speed pump.

If the DIP switch is OFF, the controller will use a traditional single speed pump.

DIP Switch 3: (ON = Low speed heating; OFF = High speed heating)

If the low speed of the pump will supply enough water to the heater to prevent the heater from rapid-cycling, then this switch can be ON. Otherwise, the system should only heat with the pump in the High Speed and the switch should be OFF.

Factory DIP Switch Setting

Bank 1	Bank 2
#1 = On	#1 = Off
#2 = Off	#2 = Off
#3 = On	#3 = Off
#4 = Off	#4 = Off
#5 = Off	#5 = Off
#6 = Off	#6 = Off
#7 = Off	#7 = Off
#8 = On	#8 = Off

3.2 Turning on the Command Center

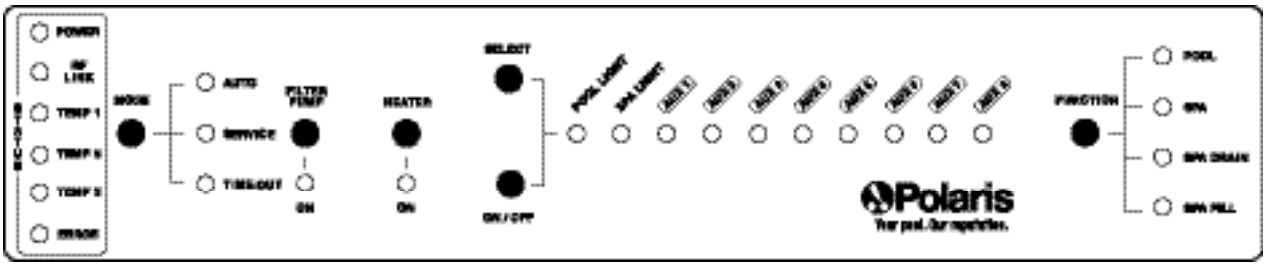

Turning on the Command Center

Complete the following steps to perform the initial startup procedures

1. Turn on power to the command center at the main electrical service panel.
2. The circuitry will perform a self-diagnostics test. The LEDs will sequentially turn on and off, starting from the lower right LED to the upper left LED. Each LED will light a second time and remain on until the one is lit. They will all turn off, with the exception of the power light. This startup test can be used once the installation is complete to quickly verify that all of the LEDs are functioning.
3. At the command center, press MODE once to select the service mode.
4. Press FUNCTION on the right side of the status board to place the command center into spa mode. Each time the function button is pressed, the command center will progress to the next function mode.

   Note: When transitioning from one mode to another, the valve actuators will turn. Verify that the intake and return valves rotate to the correct position. In POOL mode, the suction and return valves should be positions to draw water from the pool and return to the pool. For SPA mode, the suction valve should be positioned to return water to the spa. for SPA DRAIN, the suction valve should be positioned to draw water from the spa and the return valve should be positioned to return water to the spa.

   If either valve is in the wrong position, flip the toggle switch on the back of the actuator to rotate it into the correct position. If the valve actuators are not set properly, the valve diverter may not properly close allowing water to be drawn from or returned to a different location than expected. Verify that the valve rotates to the proper position. If the valve does not rotate to the proper position, refer to the instructions included with the valve actuator to adjust the alignment.
5. Turn on the individual pieces of equipment to verify that they are functioning properly:

a. Press FILTER PUMP to turn on the main circulation pump.

b. Press HEATER to verify that the heater ignites. When in the service mode, the safety interlocks are disabled. Although the heater can be tested in the Service mode, it is possible to shut the pump off causing permanent damage to the heater. Always allow sufficient time for the pump to run so the heater can cool down before shutting the pump off or exiting the Service mode.

c. Turn on each of the auxiliaries to verify they are functioning properly. To turn on an individual auxiliary, press SELECT until the LED for that auxiliary flashes. The flashing of the LED indicates the selection of that particular auxiliary. Press the ON/OFF button to turn the selected auxiliary on or off. To select another auxiliary, simply press SELECT until the appropriate auxiliary LED is flashing. When you reach the end of the bank of 10 auxiliary LEDs, the select button will scroll back to the pool light auxiliary.

3.2 Turning on the Command Center

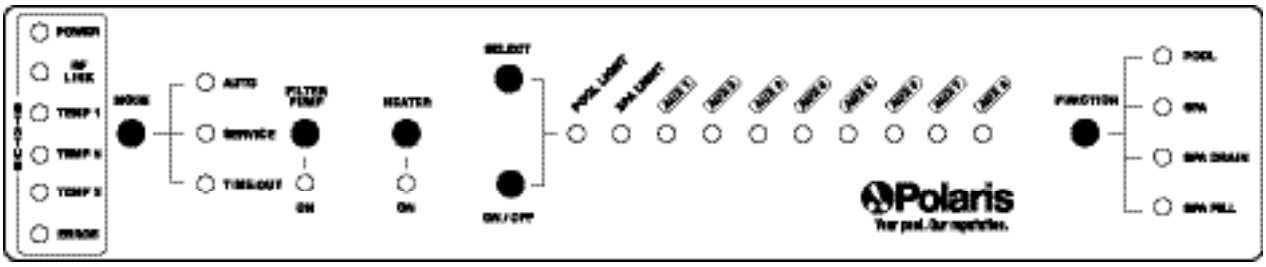

6. Check the sensor status lights. If the light is on, check the appropriate sensor wiring and connections. If there is no temperature sensor hooked up, the red LED will be on. If the LED is lit, but the sensor is installed, the wiring should be checked to verify that the connection is sound before replacing the sensor. If the ERROR light is on, please contact an authorized service technician before proceeding.
7. Press MODE twice to bypass the TIME-OUT mode and enter the AUTO mode. When leaving SERVICE or TIME-OUT`mode, the command center will turn off all activated pieces of equipment and position the valves for pool mode. Note: Turning the pump off while the heater burners are hot can cause permanent damage to the heater. Allow cool water to flow through the heater for at least four minutes prior to turning off the filter pump. Once cool, the command center can be placed in auto mode.
8. Once the auxiliary equipment has been installed, use the pre-printed labels provided to rename the auxiliaries used. There are also some blank labels that can be written on with a permanent marker in the event that the equipment is not listed.

3.3 Remote Control Training

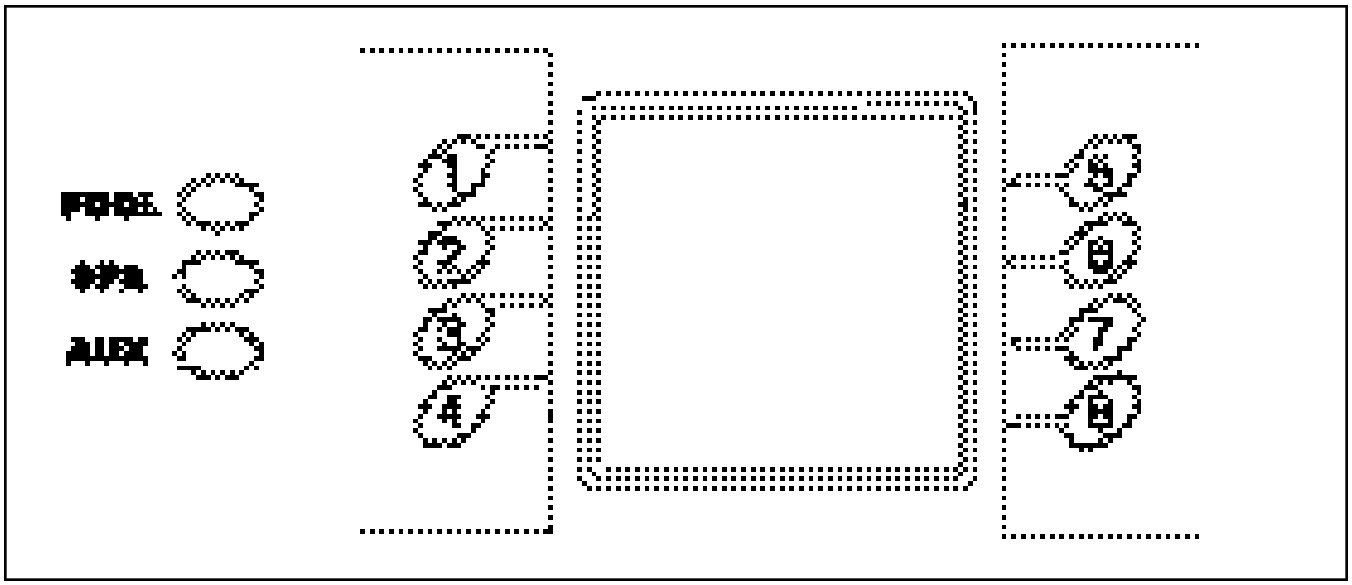

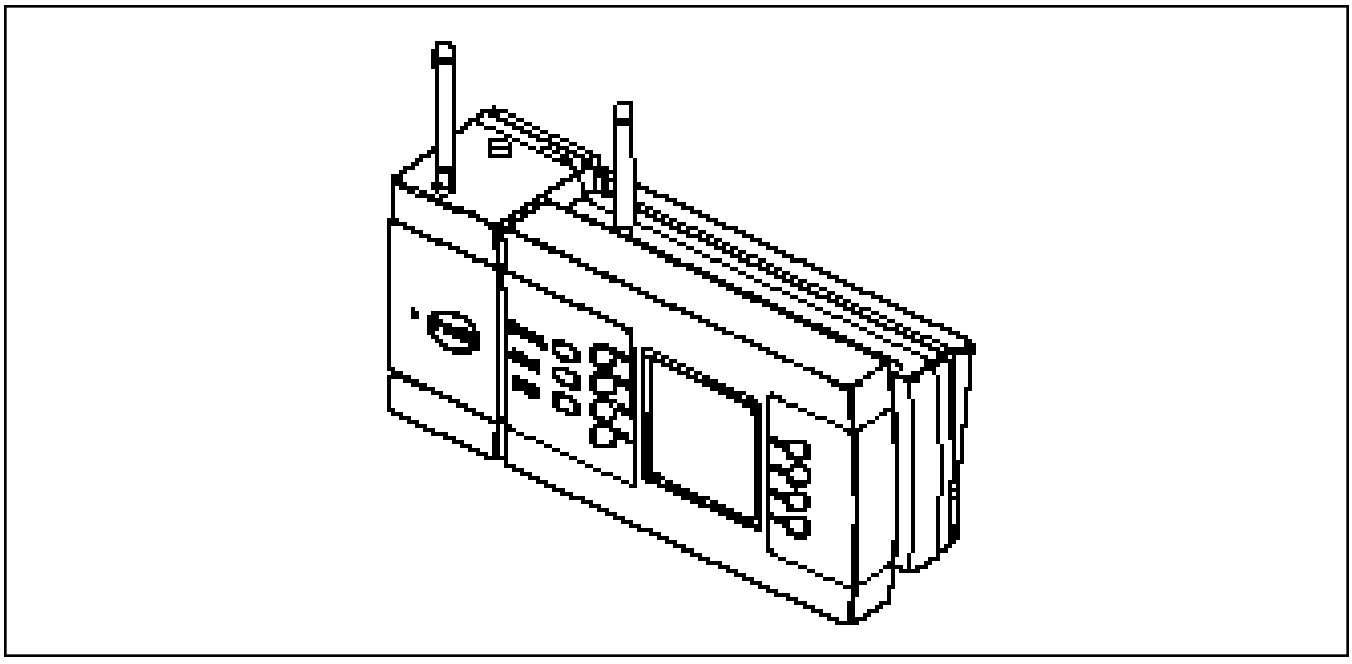

The remote has been trained at the factory to communicate only with the command center it has been shipped with. **The training of a remote to a specific command center is not lost in the event of a power failure or dead battery in the remote.**

In the unlikely event that communication cannot be established or if additional remotes were purchased to be used with the same controller, follow the instructions below.

1. At the command center, press the Mode button until the TIME-OUT LED is lit.
2. Press and hold Button 1 on the remote. See the diagram below.
3. While pressing Button 1, press the POOL button.

   A series of waves will appear on the display. When the message "Requesting System ID - Loading X/127 (counts from 1 to 127)" appears, the buttons can be released.

   If the waves appear on the display without the “Requesting System ID” message, the POOL button was pressed before Button 1. Release the buttons and try again, making sure that **Button 1 is pressed first.**
4. Once the remote has been trained successfully, push the Mode button at the command center until the AUTO MODE LED is lit. Press the <POOL>, <SPA>, or <AUX> buttons to establish communication between the remote and command center and verify proper remote functionality.

   Note: It is possible that unsuccessful communication attempts will occur if multiple functioning remotes are in the same vicinity. If one of the remotes has been trained to the command center, disconnect the battery or position the remote far enough from the command center so the signal is too weak to communicate with the command center.

3.4 Charging Base Training

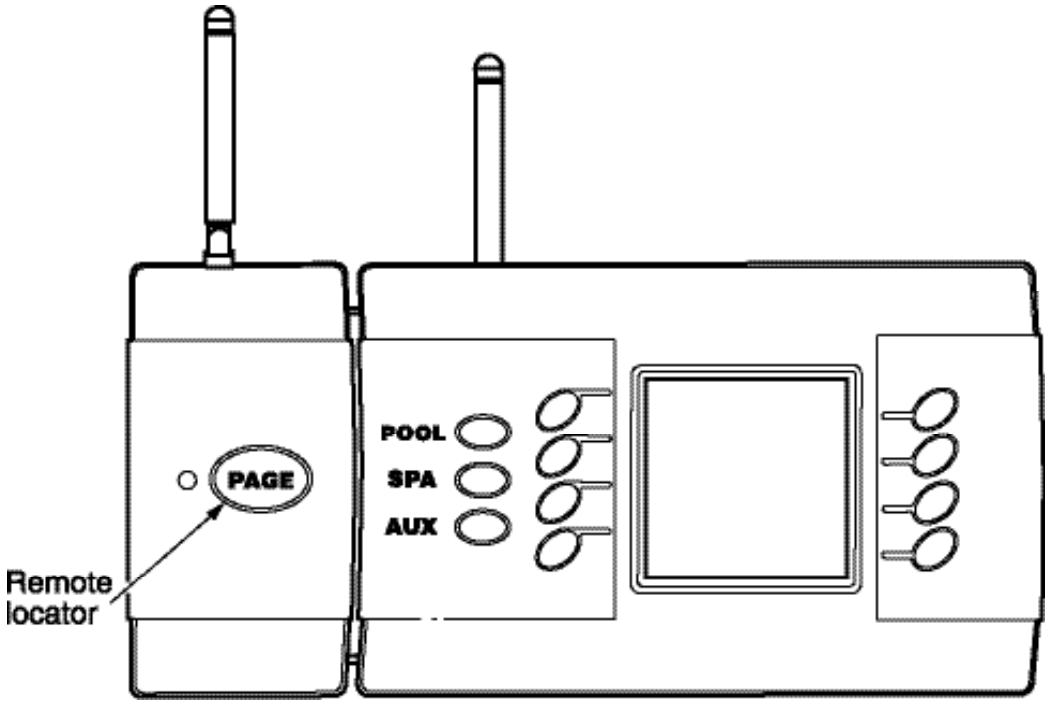

3.4 Charging Base Training

The charging base has been trained at the factory to communicate with the remote with which it has been shipped with. It communicates with the remote for paging operations. To test the training, plug it into a 120V electrical outlet and press PAGE. The remote should begin to beep in response to the page signal. If the remote does not beep perform the following steps:

1. Verify that the remote is trained.
2. At the command center, press the Mode button until the TIME-OUT-LED is lit.
3. Connect the provided power supply to the charging base, but do not plug it into a 120V electrical outlet.
   a. Press and hold the PAGE button on the charger, but do not plug transformer into the wall.
   b. While pressing PAGE on the charging base, plug the power supply into a 120V electrical outlet.
   c. If the charging base communicates successfully with the command center, the LED on the charging base will start flashing green.
4. If the charging base does not successfully communicate with the command center, the LED will flash orange.
5. If the training was unsuccessful, move the charging base to a location closer to the command center and perform step 3 again. Power the charging base at a location closer to the command center. The same issues outlined on page 15 (Communication Range) that may cause poor radio communication, may also cause poor reception between the charging base and the command center.

   If the training continues unsuccessfully, contact our Customer Service Department toll-free at 1-800-VAC-SWEEP (USA and Canada only) or (760) 599-9600, Monday through Friday, 7:30am to 5:00 pm, PST.

3.5 Antenna Repeater

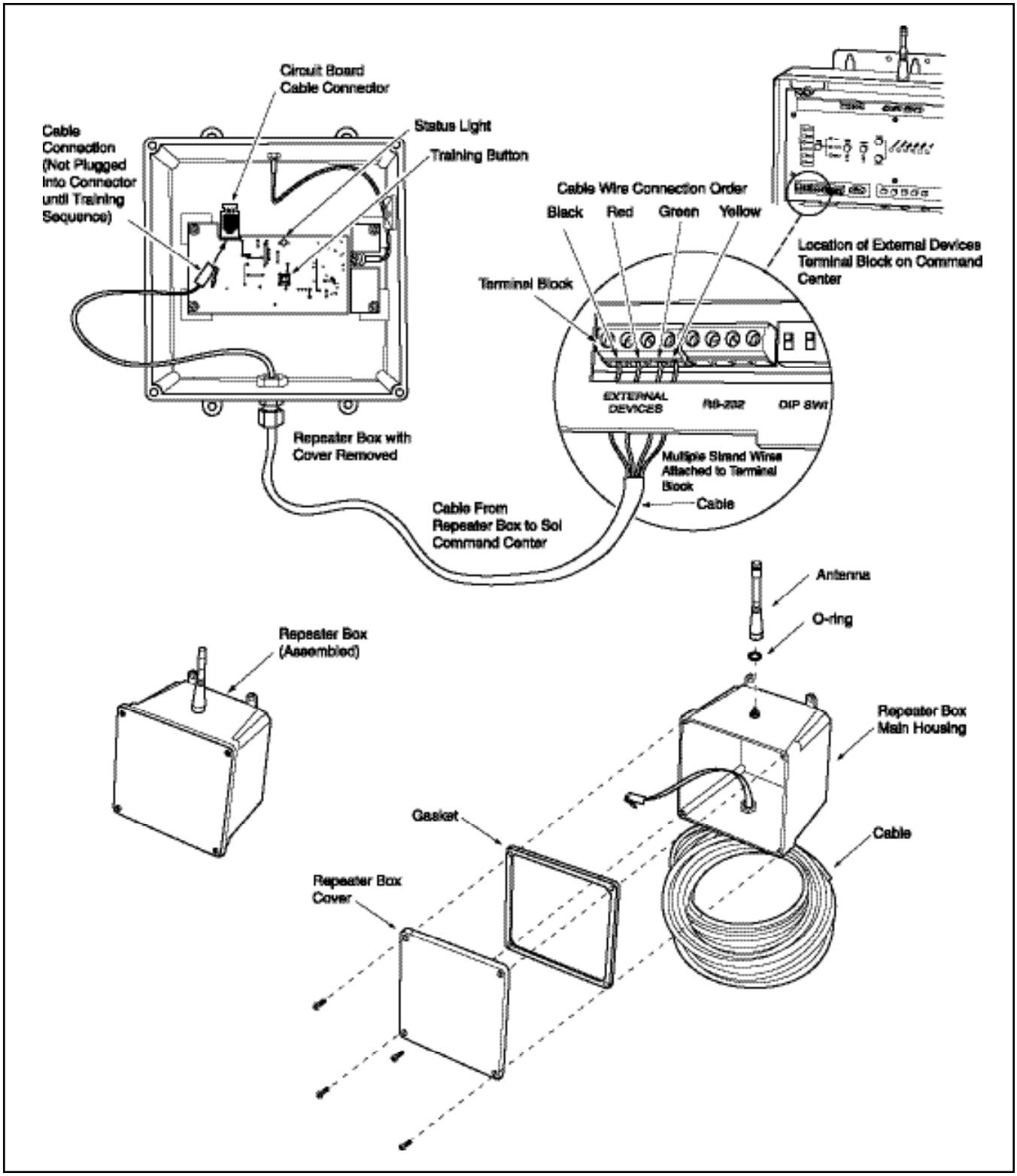

Antenna Repeater Installation

1. Identify location for Antenna Repeater so the antenna is in the line of sight for normal operation.
2. Run wire from Antenna Repeater to the Command Center.
3. Remove cover from the Antenna Repeater.
4. Verify connector on incoming wire is not plugged into the circuit board.
5. Identify the four wires going to the Command Center; should be black, red, green and yellow.
6. Locate the terminal block on the Command Center labeled “External Devices.”
7. Starting from the left, install the wires in the following order: black, red, green, yellow.
8. Verify all wires are secured in the terminal block.
9. Train the Antenna Repeater to the Command Center by holding down the push button on the circuit board and plugging in the connector.
10. The LED on the Antenna Repeater circuit board should begin flashing green. Once communication is established, the LED will remain solid green.
11. After the Antenna Repeater is successfully trained, install the cover on the box and mount to a secure location.

    Note: If the status light flashes orange after training, communication was not established. Make sure the wiring order is correct at the External Devices terminal and repeat training procedure.

4.1 Command Center Panel Operation

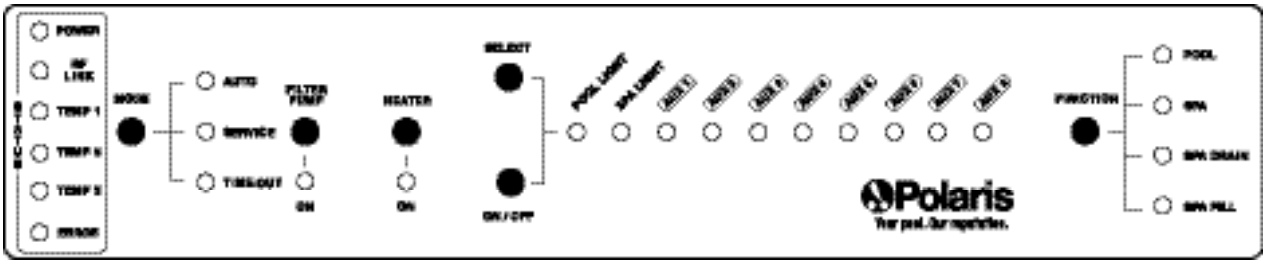

The Command Center is designed to access equipment from the remote control unit. Accessing equipment from the command center should only be performed by a qualified pool service professional. When the equipment is accessed from the control panel, all built in safety delays are disabled and permanent damage to equipment could result if precautions are not taken.

To activate equipment from the Command Center:

MODE: Switches the controller from AUTO to SERVICE to TIME OUT mode.

AUTO: This is the mode that the Command Center should be set to enable remote operation. From this mode, the remote turns on or off any equipment and changes any system settings for schedules.

SERVICE: This mode turns equipment on or off from the Command Center and blocks input from the remote. The Command Center will remain in this mode indefinitely and must be switched to AUTO mode manually. While in this mode, the remote will be locked out from use and a message that says “SERVICE MODE ENABLED, SCHEDULES INACTIVE” will be displayed if the user tries to use the remote.

When entering the SERVICE mode, it is important to remember that all of the equipment will turn off. To avoid any equipment malfunction, it is necessary to turn on the equipment manually at the Command Center. For example, if the heater is firing and the service mode is entered, the heater can be seriously damaged unless water continues to flow through the heating elements. By manually turning on the filter pump, damage to the heater can be avoided.

Note: SERVICE mode is used if an indefinite period of time is needed to work on the equipment. TIME-OUT mode turns off the equipment for a period of two hours.

TIME OUT: This mode is similar to SERVICE mode except that the command center will remain in this mode for a period of 2 hours and then switches automatically to AUTO mode. While in this mode, the remote will be locked out from use and a message that says “TIME OUT MODE ENABLED, SCHEDULES INACTIVE” will be displayed if the user tries to use the remote.

How to check the Polaris Sol 1000 system

The equipment information on the LCD always indicates the correct status. Potential indications of a problem may actually be a faulty sensor or loose connection. At system startup, the LEDs will cycle three times to verify that they are functioning properly. Once the cycle has been finished, the lights of the active pieces of equipment should only be on. The red lights (TEMP 1 through TEMP 3) should only be on when the sensor has not been installed or when not working. If the red Error light is on, a qualified Polaris service technician should be called.

FILTER PUMP: Turns on or off the filter pump from the system.

4.1 Command Center Operation

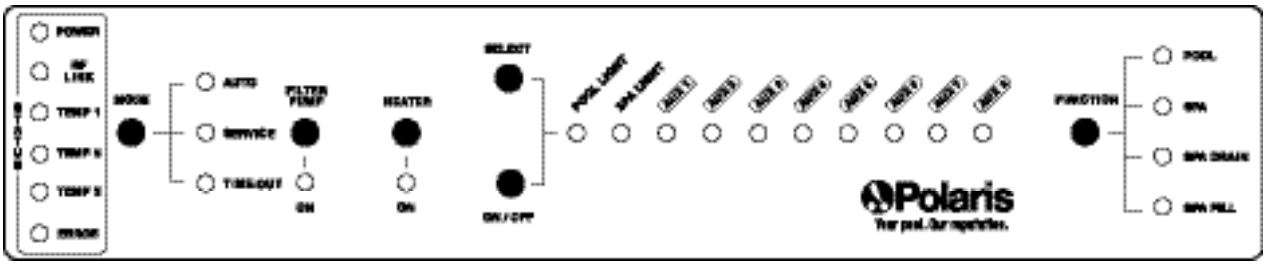

HEATER: Enables the heater. The heater will only fire if water is circulating through the system. In order for the heater to fire, the filter pump must also be turned on.

SELECT: Selects which auxiliary will be turned on by pressing ON/OFF. When in SERVICE or TIME OUT mode, the LED will flash indicating the current SELECT position. Pressing SELECT will advance to the right through each piece of equipment available. After you reach AUX 8 , pressing SELECT again will advance back to POOL LIGHT.

ON/OFF: Pressing ON/OFF activates the equipment indicated by the flashing LED. Pressing the button again will deactivate.

FUNCTION: Pressing this button will cycle through the four available functions of the controller.

POOL: This function sets the valves so suction from the pool returns the filtered water back to the pool.

SPA: This function sets the valves so suction from the spa returns the filtered water back to the spa.

SPA DRAIN: This function sets the valves so suction from the spa returns the filtered water back to the pool. Care must be taken when using this function because it is possible for the pump to run dry once all the water is drained out of the spa. If the pump runs dry for prolonged periods, permanent damage can be done to the pump.

SPA FILL: This function sets the valves so suction from the pool returns filtered water back to the spa, resulting in a spillover effect from the spa back into the pool.

4.2 Charger Base Operation

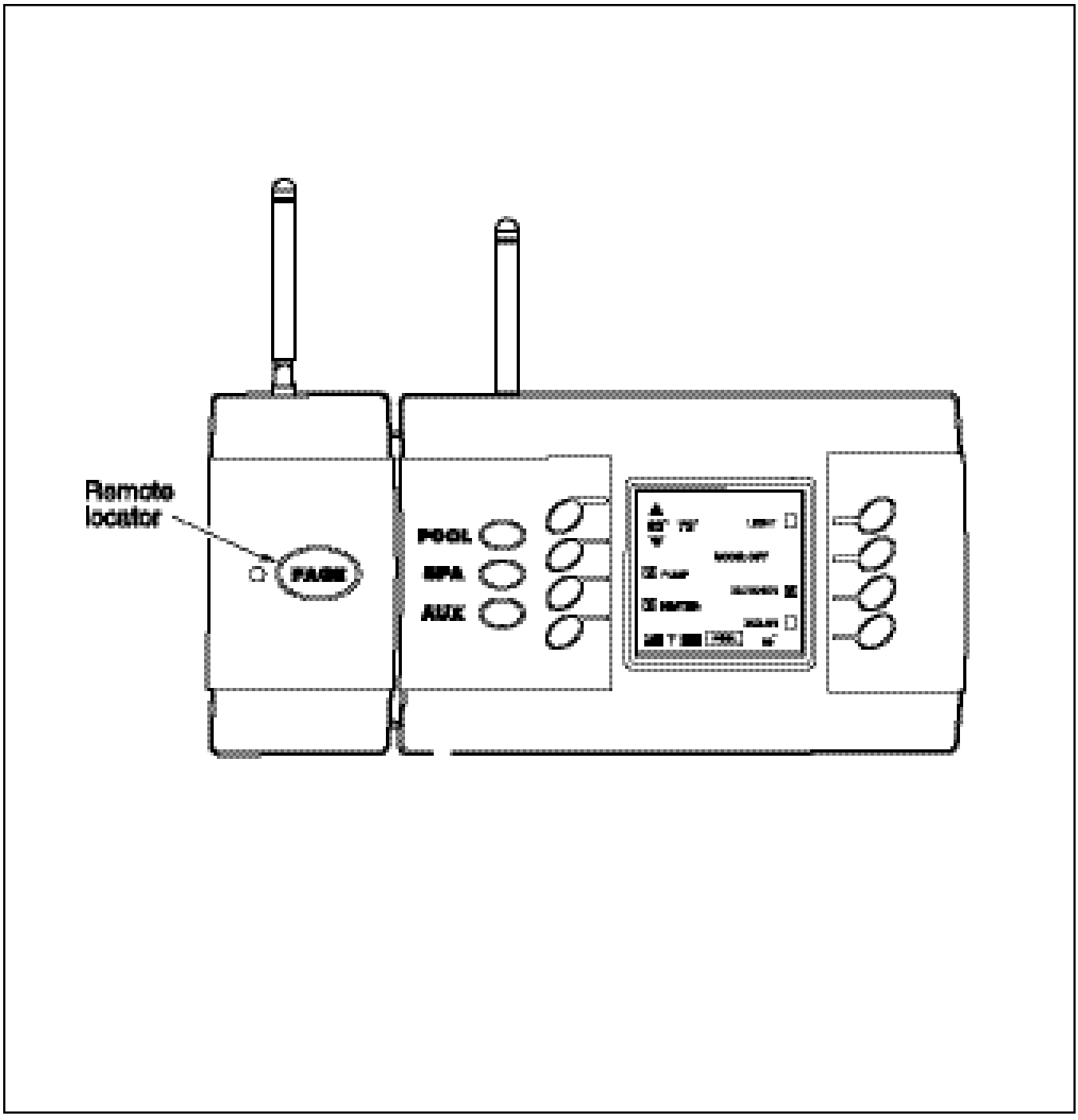

Charging the Remote

When the remote is not being used, place it onto the charger and it will automatically be recharged for the next use. (Before the first use of the Remote, make sure the battery is fully charged for 15 hours.) When the remote is placed on the charger, the LED on the Charging Base is green, which indicates that it is communicating with the Remote and Command Center. The light may also flash orange and green during the initial setup and while paging the Remote.

If the battery strength is so low that the Remote will not activate a function, you may hear a short beep but it will not respond to the electronic command. You must recharge the Remote to be able to use it.

Place the Remote on the Charging Base and allow it to recharge fully before using it. If you must use the Remote before it is fully charged, it will function normally while on the Charging Base, even with a low battery.

Paging Operations

To locate a lost Remote, press the PAGE button on the Charging Base. The Remote will detect the signal and begin beeping for 60 seconds.

Once the Remote is located, pressing the POOL, SPA, or AUX buttons will stop the beeping and activate the Remote. The Remote will only beep if there is sufficient battery strength. If the Remote has been off the Charging Base long enough to drain the battery, then the locator signal will not function.

4.3 Remote Control Operation

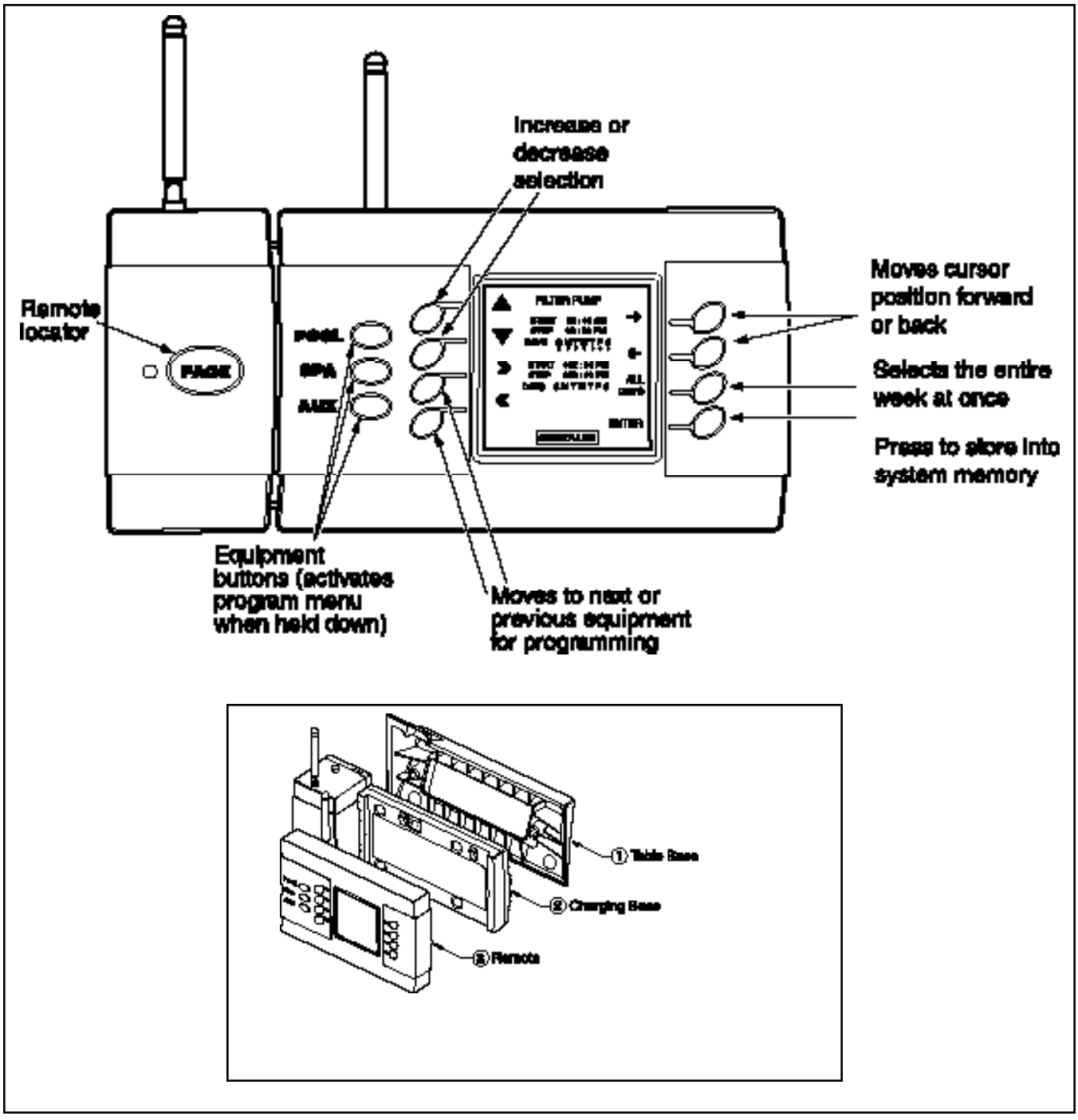

Controller Overview

The Sol 1000 wireless remote controller is streamlined and easy to use. It is a portable control system that has been designed with the user in mind. Simply push either POOL, SPA or AUX to activate the remote. Once the remote is active, push the desired button to activate or deactivate the chosen equipment.

Several sub-menus are available to walk you through the program information. The eight buttons surrounding the LCD correspond to the menu information. The buttons next to selections that have boxes indicate on or off (toggle) choices: X or ✔ for active, empty for inactive.

The Sol 1000 can turn the pool/spa equipment on and off in two ways:

1. Press the button to activate the selected equipment. The LCD will display the appropriate menu to choose the desired settings.
2. Program the equipment to automatically turn on and off at specific times.

General Information

The wireless remote and charging base are designed with no wiring requirements to assist in easy installation and exceptional mobility.

- The charging base is equipped with a 9V wall transformer that plugs into any 120 volt electrical outlet. The charging base should be located in the house or other weather protected areas.
- The charging base can be positioned on a table or counter using the angled table base, or can be permanently mounted to a wall. To permanently mount to a wall:

1. Remove the two screws and the angled table base from the charging base.
2. Position the charging base at the desired wall location.
3. Mark the location of the mounting holes on the wall.
4. Drill holes at the marked location, using the appropriate drill bits for the mounting hardware selected. Use plastic wall anchors to prevent the screws from pulling out of the wall.
5. Attach the charging base to the wall using the appropriate hardware (not supplied).

4.3 Remote Control Operation

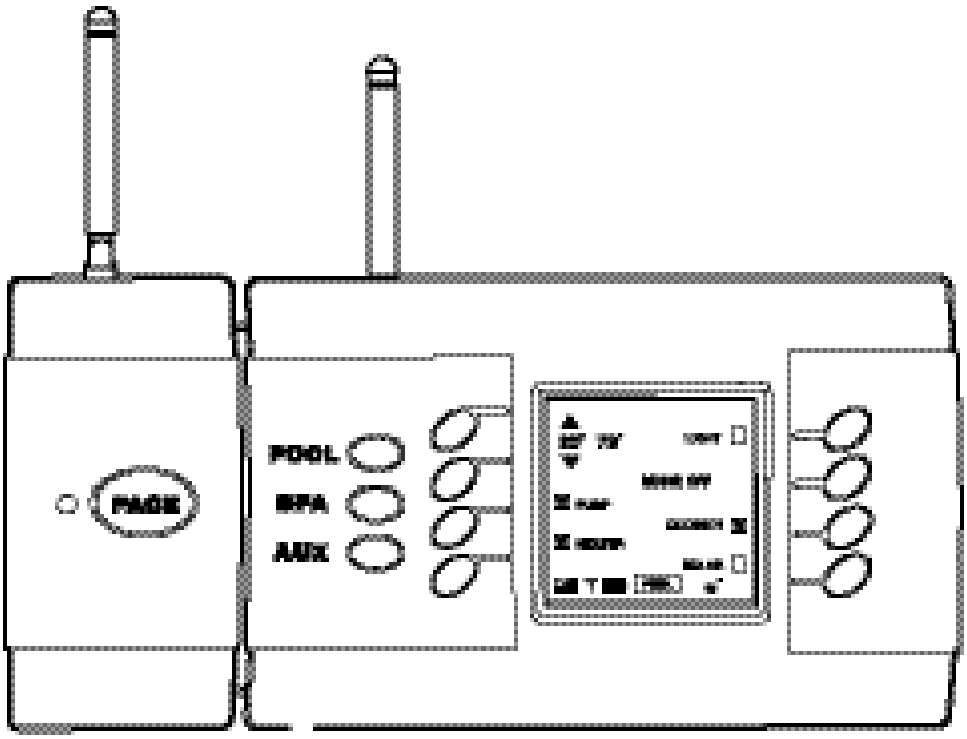

Water Resistance

The wireless remote is a water resistant unit. It is designed to withstand the moisture of wet hands and splashing. It is not designed to resist periods of prolonged exposure to water due to immersion, rain or sprinklers. This type of exposure could cause permanent damage. **The remote should never be placed on the charging base when wet.**

Sunlight

Extended exposure to direct sunlight can permanently damage the remote LCD. The display is a liquid crystal type that, when subjected to direct sunlight for extended periods, will heat up and cause the display to "black" out. If the display "blacks" out, remove the remote from the sunlight and let the display cool down until it has recovered and can begin to function again. When using the remote outside, care should be taken to protect the display by keeping it in the shade or covering it with a towel.

Communication Range

Although reliable communication between the remote and the command center can be expected at distances of up to 150 feet, the actual range can be affected by a number of different variables. The range can be affected by elevation changes, environmental conditions or signal disruptions caused by physical barriers. Barriers such as retaining walls, walls containing metal (such as re-bar), metal garage doors and heavy plant growth can absorb the radio signal and reduce range.

4.3 Remote Control Operation

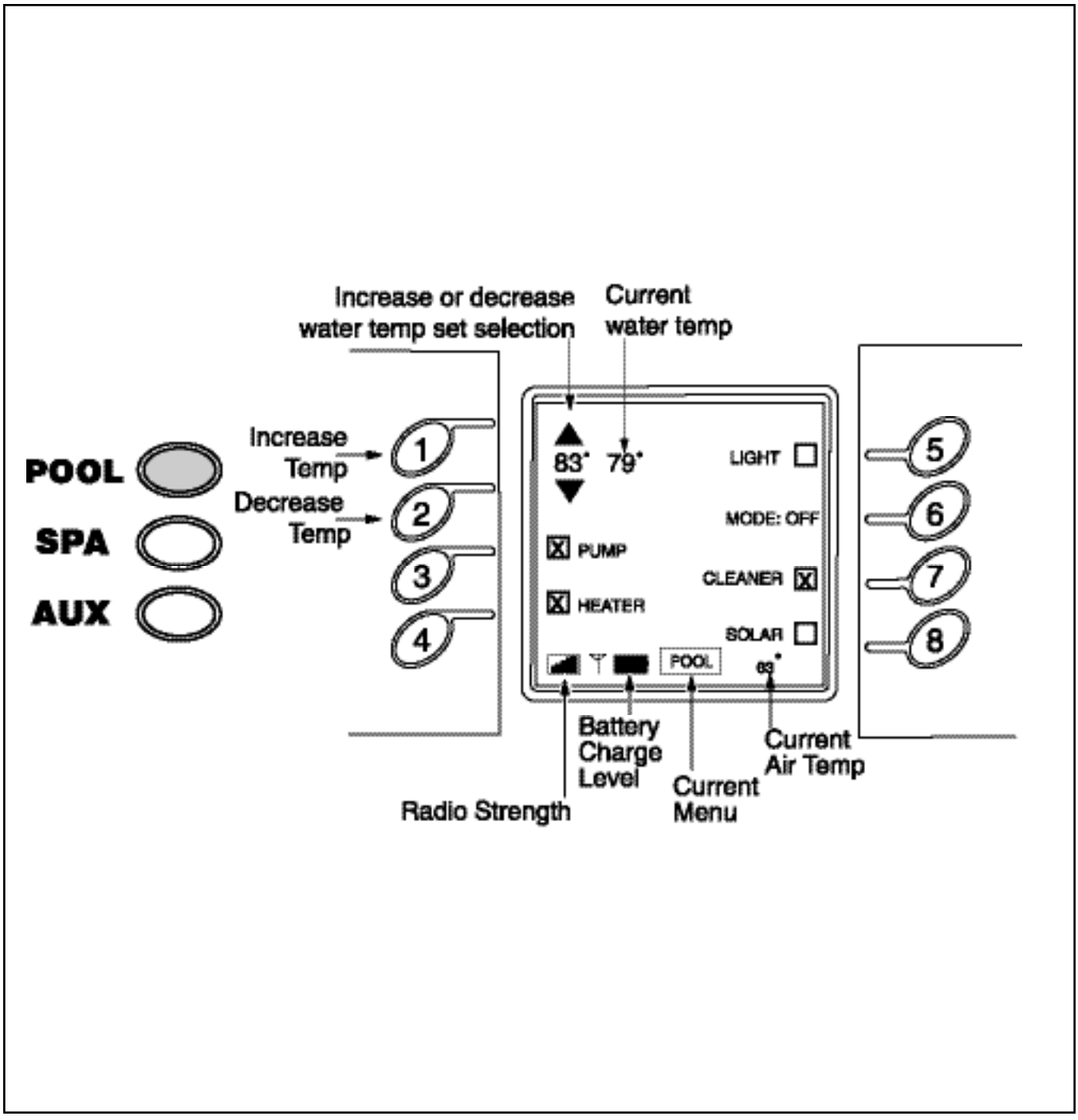

Using the Main Buttons

The LCD backlight stays lit for approximately 15 seconds and then turns off to save the life of the battery. Pressing any button will reactivate the backlight.

POOL BUTTON

The pool button activates the menu for the pool functions. The functions include the pool temperature, pump, heater, lights, mode activation, cleaner and solar. Once the pool menu has been entered, press the buttons corresponding to the applicable functions to switch the function on and off. Refer to the scheduling instructions on page 126 for programming details.The pool temperature can be adjusted from 68 through 104-degrees.

How to control the pool/spa temperature

Press the pool or spa button. Using buttons 1 or 2, increase or decrease the water temperature set point until the desired temperature is reached. Adjust if necessary. The current water temperature is shown next to the set point. (The circulation pump must be on to get an accurate temperature.) The air temperature is shown at the bottom right of the LCD.

TO HEAT THE POOL, THE HEATER MUST BE ENABLED (an X in the box next to HEATER). This tells the controller to look at the set point when the filter pump comes on and if necessary turn on the heater. The controller will only fire the heater if the pump is on and the heater is enabled. Turning the pump off (manually or with a schedule) will leave the heater enabled and ready to heat the next time the pump is turned on.

Solar heating can be used by itself or to supplement the primary heater on the system. Solar heating will perform the same as the primary heater. If the demand for heat is present and the solar heater is enabled, then water will flow to the solar panels for heating.

4.3 Remote Control Operation

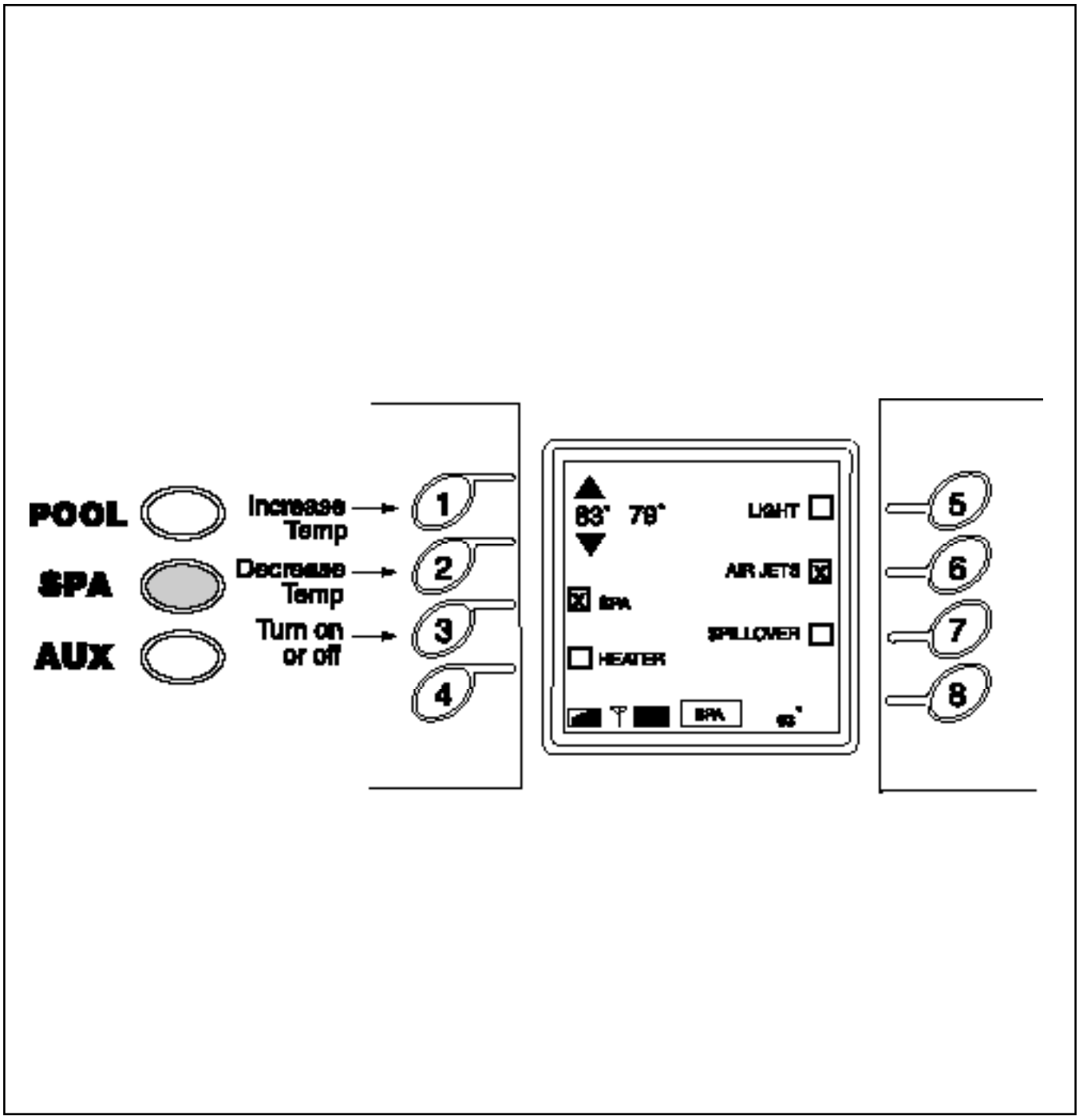

SPA BUTTON

The spa button activates the menu for the spa functions. The functions associated with the spa menu include spa temperature, lights, air jets, and spillover. Refer to the scheduling instructions on page 126 Programming Schedules.

When activated, the spa mode switches water circulation from pool to spa (on pool and spa combination models only). Turning on the spa activates the filter pump (after a 45 second delay for valve rotation) and deactivates the booster pump cleaner, if it is on. The spa must be on to display the spa temperature and/or heat the spa.

The spa temperature can be adjusted from 68 thru 104-degrees F.

Spillover will draw water from the pool and return all water back to the spa. In an elevated spa, this will create a waterfall effect as the water spills over the spa edge and back into the pool.

How to control the spa

1. Press the spa button to activate the spa menu.
2. Press buttons 1 or 2 to change the spa temperature. The temperature shown next to the spa temperature is the actual water temperature. See the following diagram.
3. All available selections such as lights, air jets, and spillover will be displayed on the LCD. Pressing buttons 3-7 will toggle the selection on and off.

   HEATER box must be enabled (checked) for heating spa. If you have a blower and a jet pump, only one device will activate when the AIR JETS option is selected. The device not controlled by AIR JETS can be activated from the AUX menu.The controller will automatically turn the SPA off after 6 hours and return itself to POOL Mode. This allows the pool to be filtered if the user forgets to turn the spa off when they are done using it.
4. If the controller is set up as a “pool only” control (no spa present on the pool filtration system), this button will have no function and pressing it will have no effect. Review Appendix D and consult your pool service professional to convert the controller to a pool only control.

4.3 Remote Control Operation

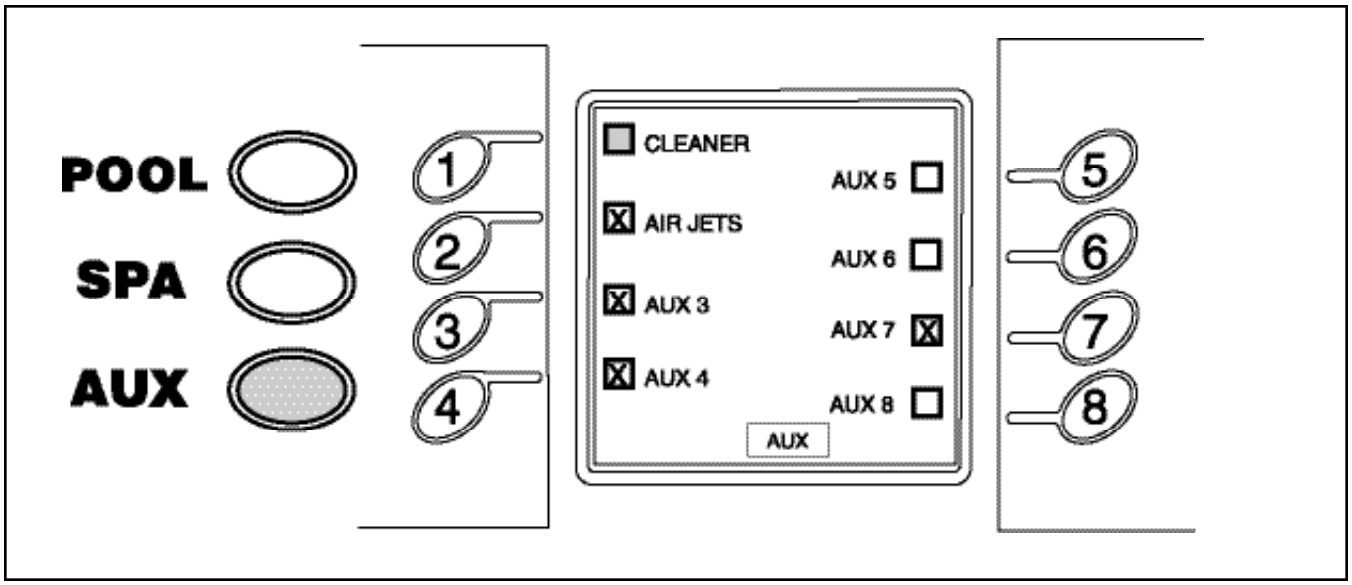

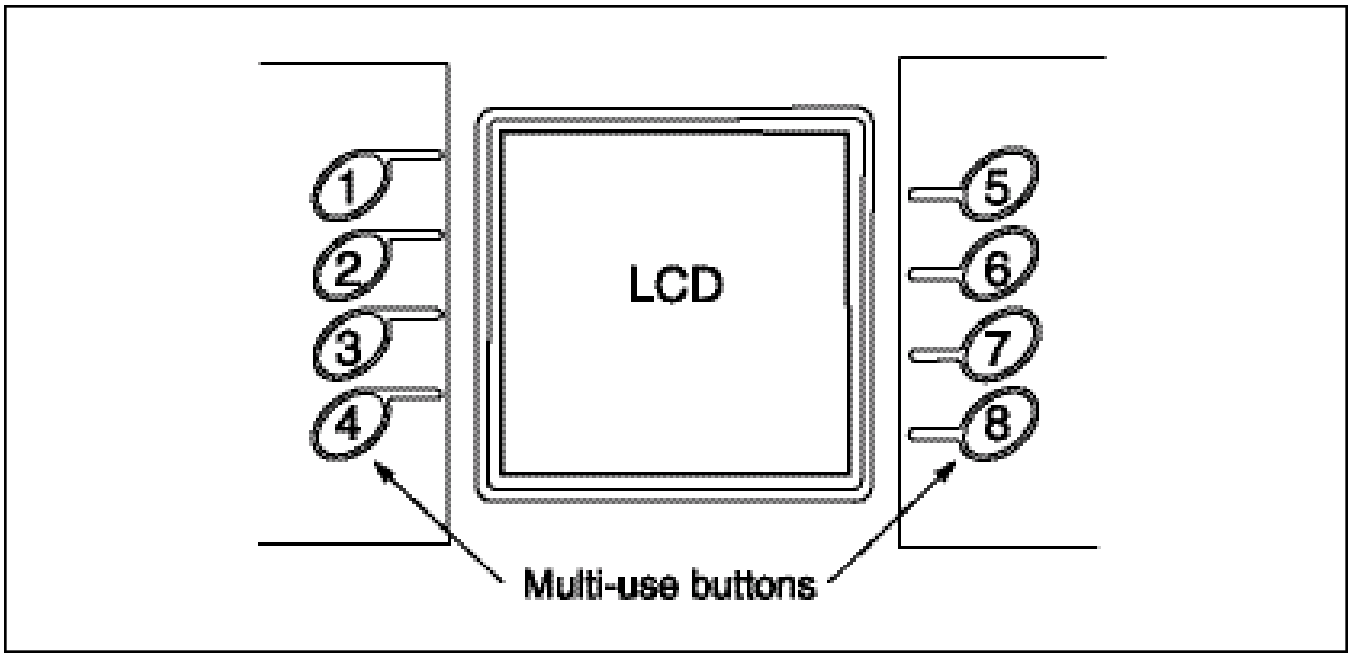

AUX BUTTON

The auxiliary button activates the auxiliary equipment menu. Up to eight auxiliaries can be programmed into the command center, depending on the number of available relays. The auxiliary mode controls auxiliary equipment such as additional lights not wired to the pool or spa light circuitry, cleaners, waterfalls, fountains, sprinklers and other backyard features. Each auxiliary button can be custom labeled by accessing the labels menu under the programming function. Matching labels are supplied for the command center panel. The buttons should be labeled as soon as they are programmed. Consult your installer for the auxiliary assignments and follow the labeling instructions on page 125 of this manual.

The position of the Command Center DIP switches may indicate the piece of equipment associated with the auxiliary position. Certain auxiliary features will have to be connected to specific relay outputs on the command center for proper operation. For example, if a booster pump cleaner is installed, the booster pump must be connected to the AUX 1 output. DIP Switch 1 of Bank 1 must be placed in the ON position so the controller can recognize the cleaner for proper operations. Consult your pool service technician and this manual for further information.

Multi-use buttons

The eight non-labeled buttons on either side of the LCD control the displayed functions under each menu. They can be turned on and off by pressing the corresponding button. As the menu functions differ, these buttons will change with the selection.

Note: Boxes that are grayed out indicate that the specific equipment is locked out, or not available for activation.

4.3 Remote Control Operation

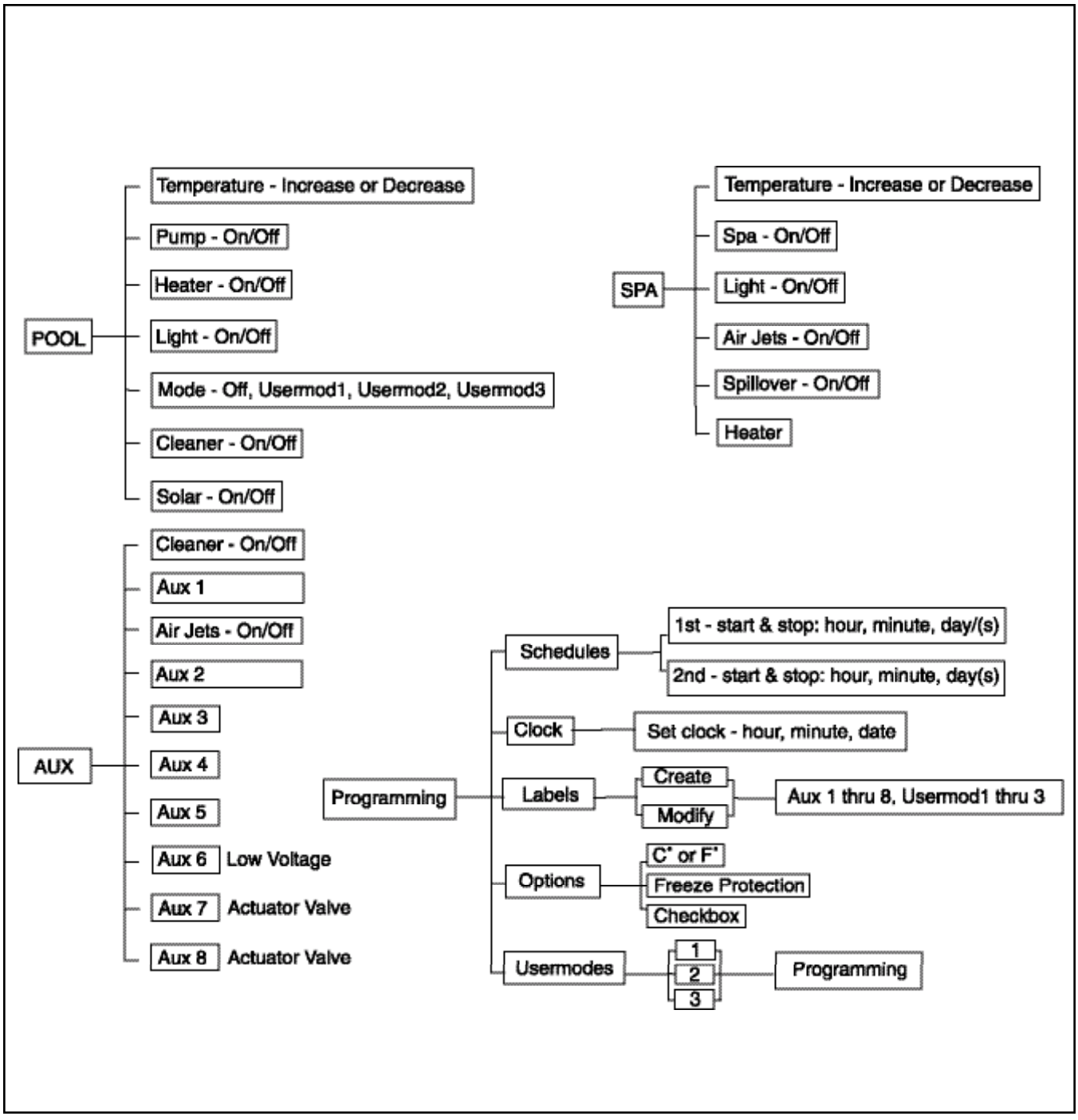

1. **Heater "Short Cycling" Prevention**

   When the heater is activated and the desired temperature is reached, the heater will turn off and remain off until the temperature falls two degrees below the setpoint. This feature prevents the heater from cycling (i.e. heater turning off and on in rapid succession).

2. **Cleaner Lockout**

   The pool cleaner will only activate when the system is in the pool mode (i.e. water circulating to the pool). The pool cleaner requires that water circulates to the pool for correct operation. Return to pool mode to activate the cleaner.

3. **Spa Drain**

   The spa drain will only activate from the service mode.

4. **When you turn on booster pump cleaner**

   Verifies the main circulation pump is running. If it isn't, the main circulation pump will be turned on (or it can be done manually).

   There is a 30-second prime delay to ensure the water is flowing to the booster pump. The LCD will read "Prime Delay" during this time.

5. **When you turn off the filter pump while booster pump is running**

   If both pumps are running, the booster pump can bemanually shut down before the filter pump.

   The filter pump can be shut down first and the controller will automatically shut down the booster pump. The system is aware that the booster pump cannot run without the circulation pump.

6. **When you turn spa on or off or activate the spa spillover mode while the filter pump is on**

   The filter pump will shut down for 45 seconds to allow sufficient time for the valves to rotate.

7. **When you activate spa or spa spillover mode**

   The filter pump will turn on automatically.

8. **When the booster pump cleaner is active and spa or spa spillover mode is entered**

   The booster pump is automatically shut down. When the spa or spa spillover mode are cancelled, the controller will reactivate the booster pump for the cleaner. If a cleaner schedule is active and it ends during the spa or spa spillover mode, the booster pump will remain off when the spa or spa spillover mode is cancelled.

9. **When the equipment is manually activated**

   Any existing schedule will be overridden. Remember to shut down the piece of equipment that was manually activated when finished. If a schedule is active, the equipment will not shut down until the next scheduled shut down time.

4.4 Safety Delays and Lockouts

10. When the spa mode is activated

The booster pump cleaner will be locked out.

11. When the heater is enabled and has recently fired

The heater will enter a 3-minute cool down mode. If the filter pump is shut down during the cool down, the pump will remain on until the delay is finished. The LCD will show the filter pump check box inactive.

12. When you manually enter spa mode with no active spa schedule

The spa will have to be turned off manually if a spa schedule is not active. If it is not shut down, only the water in the spa will be filtered, and the booster pump cleaner (or suction cleaner) will not be able to run. Turning off the filter pump will not reset the valves to pool mode. The valves will automatically return to POOL mode after 6 hours.

Wait: Prime Delay

This message is displayed whenever the booster pump for a booster pump cleaner is told to turn on. This delay ensures that the filtration pump has been running for **30 seconds** prior to turning on the booster pump so that the booster pump has time to prime.

Wait: Valves Turning

This message is displayed whenever a valve is asked to rotate. This includes switching from pool to spa to spillover mode or whenever an auxiliary valve (AUX 7 or AUX 8), including a solar valve, is asked to rotate. This delay lasts for **45 seconds**. During this delay, the filter pump will be shut off and will be restarted once the valves have stopped turning.

Wait: Cool Down

This message is displayed whenever the heater is in a cool down cycle. A cool down cycle is initiated whenever the heater had recently been fired and the pump was told to turn off. The controller will never allow water flow to be stopped to a heater that had recently been fired. A cool down cycle will most often be initiated when switching from spa to pool because the heater very likely had been heating the spa water. During the cool down delay, the pump will continue to circulate water to the heater for **three minutes** before shutting off.

Wait: Purge Delay

This message is displayed whenever solar heating gets initiated and there is a booster pump cleaner on the system. The booster pump cleaner will shut down for a **three minute** period to allow all of the water to be purged from the solar collectors. After the purge delay has completed, the booster pump will be turned back on.

Backup Battery Voltage Low, Replace Battery

This message is displayed whenever the backup battery located in the Command Center is failing. The message will be displayed every time the remote is used as a gentle reminder to replace the battery.

Communication could not be established, Please try again

This message is displayed whenever the radio signal between the remote and Command Center gets lost. Reposition the remote or antenna and try again.

5.1 Program Menu

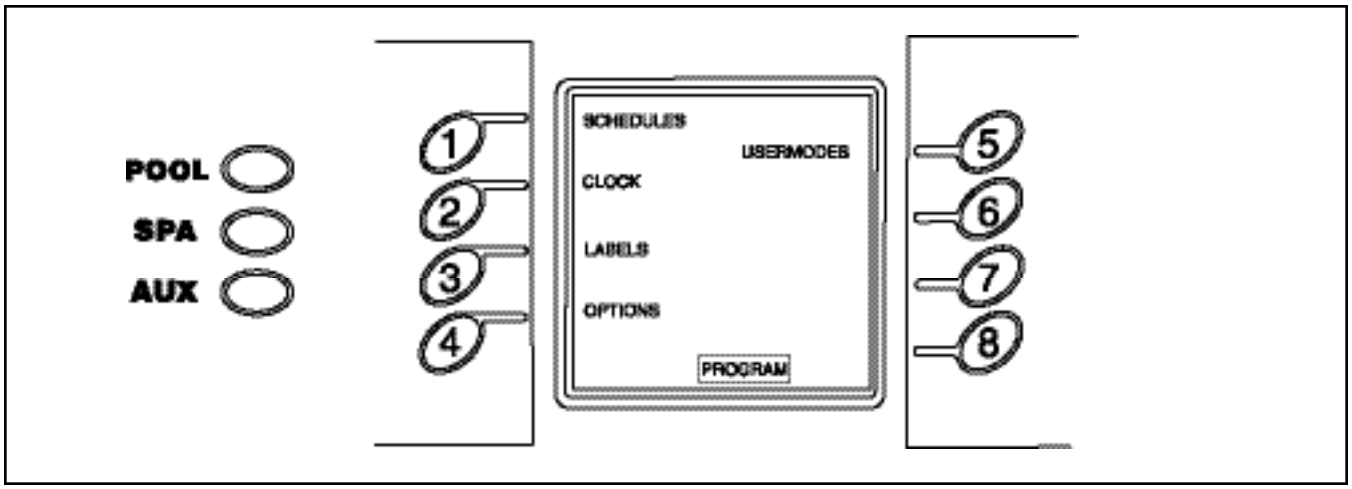

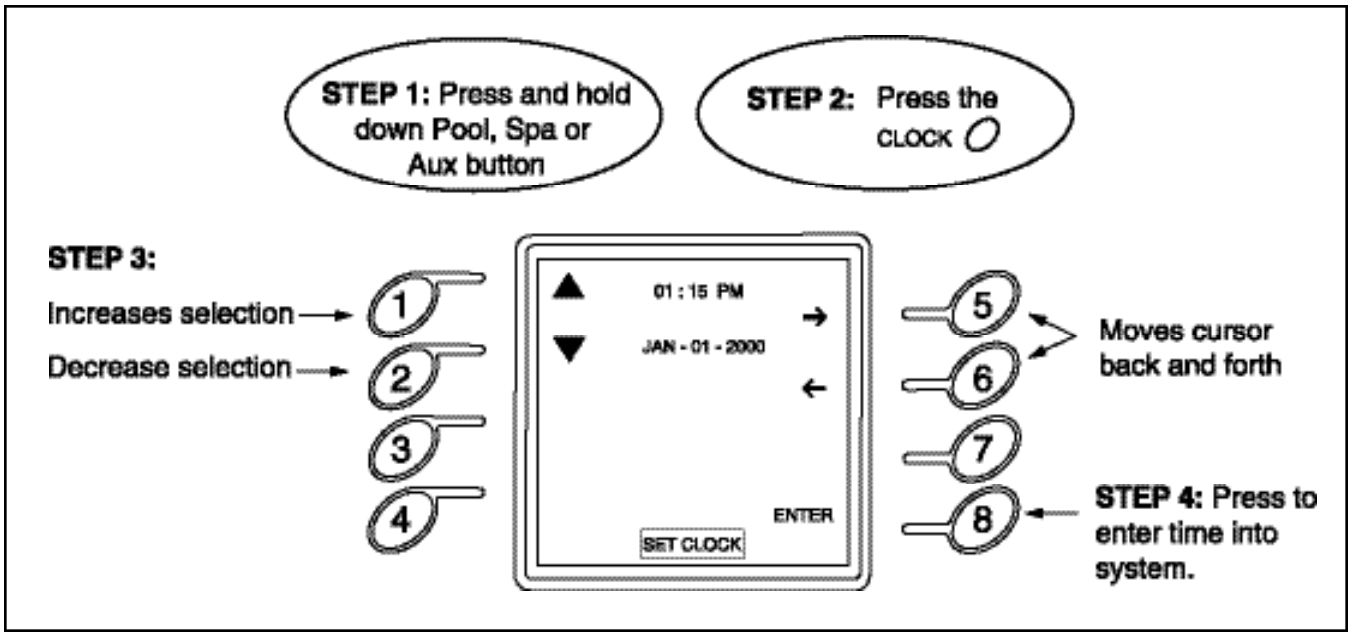

5.1 Program Menu

Program Menu

The program menu is the main menu holding all programming sub-menus: schedules, clock, label, options and usermodes. To make changes or additions to any programs, it is necessary to access the program menu before selecting the appropriate submenu. To access the program menu, simply hold down POOL, SPA or AUX until the program menu appears.

5.2 Setting the Clock

The clock menu sets the internal clock of the Sol. It is important to set the correct time and date so that the programming will operate properly.

1. Press and hold Pool, Spa or Aux until the program menu appears. See the Program Menu diagram on page 14.
2. Press button 2 of the program menu to select the Clock.
3. Use buttons 5 or 6 to move the cursor back or forward to the hour position. Buttons 1 or 2 will increase or decrease the selection. Verify the chosen time has the correct AM/PM designator..
4. Repeat this process for the minute, month, and year settings. When finished, press <ENTER> to store in memory.

5.3 Auxiliary Labeling

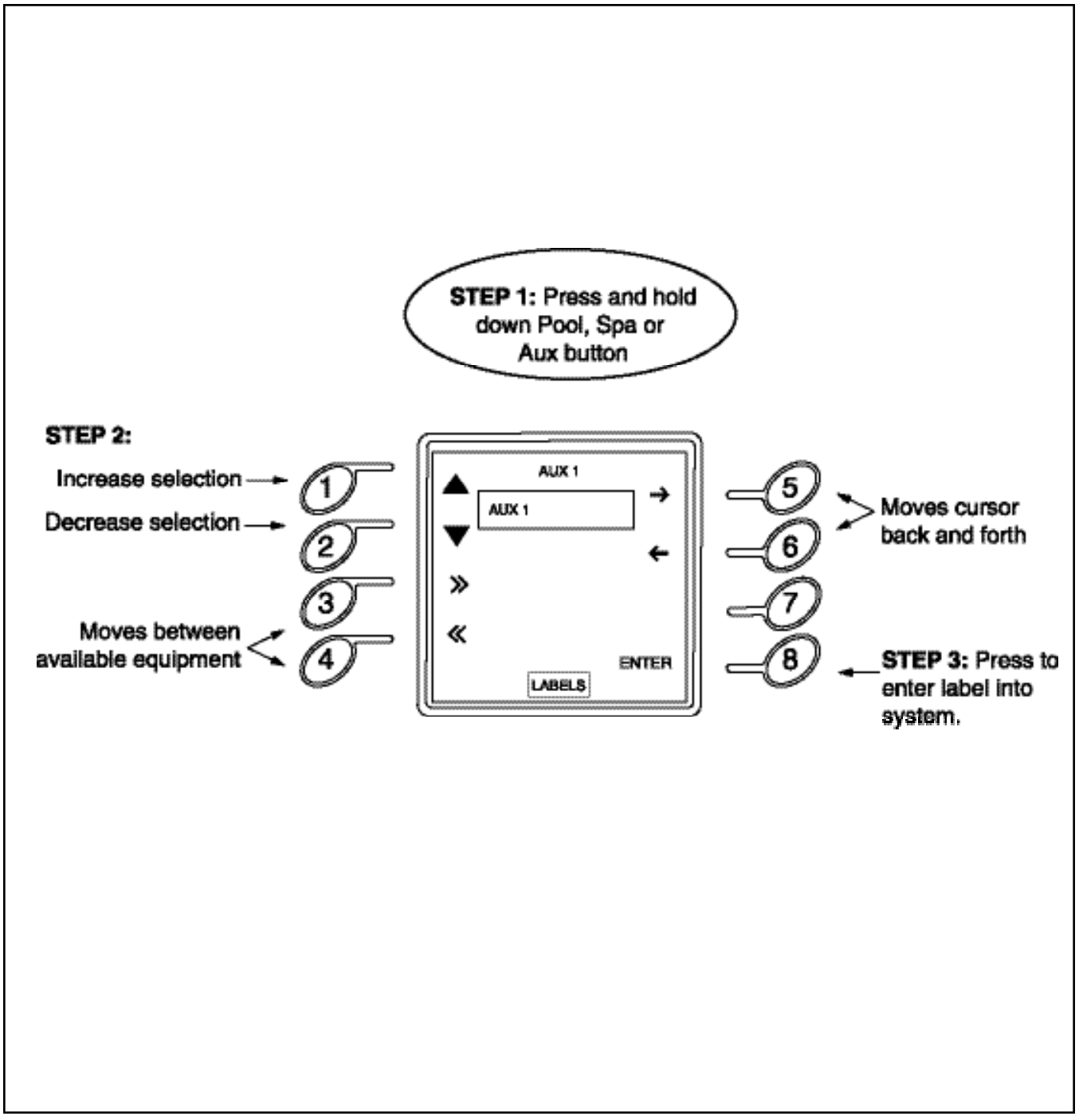

The default auxiliary labels are AUX 1 thru AUX 8 and the user modes are labeled User Mode 1, User Mode 2 and User Mode 3. Once a piece of equipment has been installed as an auxiliary, it is best to change the label for easy identification. If there is a booster pump cleaner and the Command Center DIP switch is in the appropriate position (see Appendix D on page 31), the label AUX 1 will automatically be programmed "CLEANER". If there is either a blower or a jet pump and the DIP switch is in the appropriate position (see Appendix C), the label for AUX 2 will automatically be programmed "AIR JETS". You can re-name these if as needed.

1. Press and hold the POOL, SPA, or AUX button until the PROGRAM menu appears. See the Program Menu diagram on page 14.
2. Press button 3 of the PROGRAM menu to select the LABELS.
3. The LCD will display the default name for the chosen auxiliary or user mode. The cursor will blink under the active letter.
4. Use buttons 1 or 2 to scroll through the different letters and numbers until the desired selection is reached, up to 15 characters..
5. Press buttons 5 or 6 to move the cursor to scroll through the cell.
6. Use buttons 3 or 4 to move between available equipment. Press button 8 to enter the label into memory.

   Note: If a mistake has been made, you must program a blank space at the desired location to erase the original selection.

5.4 Schedules

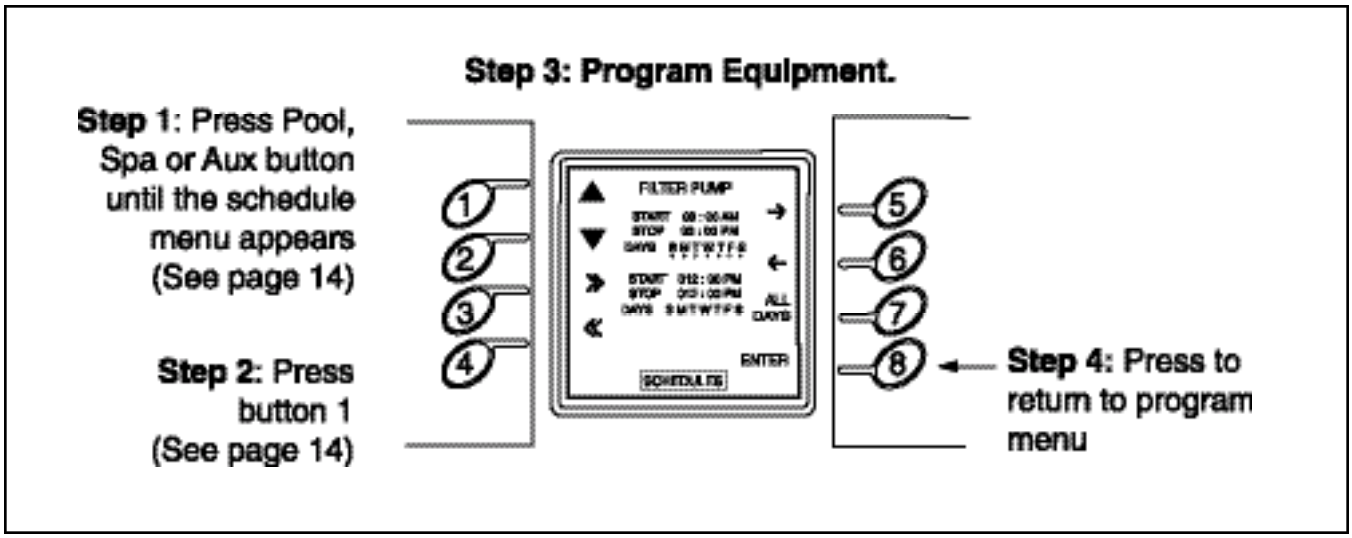

The schedule menu (button 1 of Program menu) can set operation times for any equipment controlled by the Sol. It is possible to program for all days, weekends, weekdays, or any specific day of the week. Choose the specific time in hours and minutes. Each equipment can have up to two on and off times per day. If two overlapping times are set for a piece of equipment, the equipment will turn on at the first on time and turn off at the last off time.

It is important to take into consideration the operation of each piece of equipment. Some of the equipment will need other equipment in order to operate correctly. When scheduling, review all programmed equipment to see if there are any potential conflicts that will not allow for the most efficient method of operation or may possibly eliminate the operation altogether.

Note: SPA schedule will automatically turn the filtration pump on, so a second schedule for the filter pump is not necessary.

For 2-speed pumps, a high speed filter pump schedule will override a low speed schedule.

1. Press either of the following buttons, POOL, SPA, or AUX and hold down until the program menu is displayed.
2. Press button 1 to select the Schedules.
3. The LCD will display two schedules with individual start and stop times, as well as the days of the week. These schedules control the automation of all equipment.
   - Buttons 1 and 2 increase or decrease the highlighted selection.
   - Buttons 3 and 4 are used to move between the available pieces of equipment.
   - Buttons 5 and 6 will move the cursor forward or backward to the next selection.
   - Button 7 is used to quickly select or deselect the entire week for the program.
4. The same process will be used to select the On Minute, Off Hour, and Off Minute. After all schedules have been entered, press ENTER to store in memory.

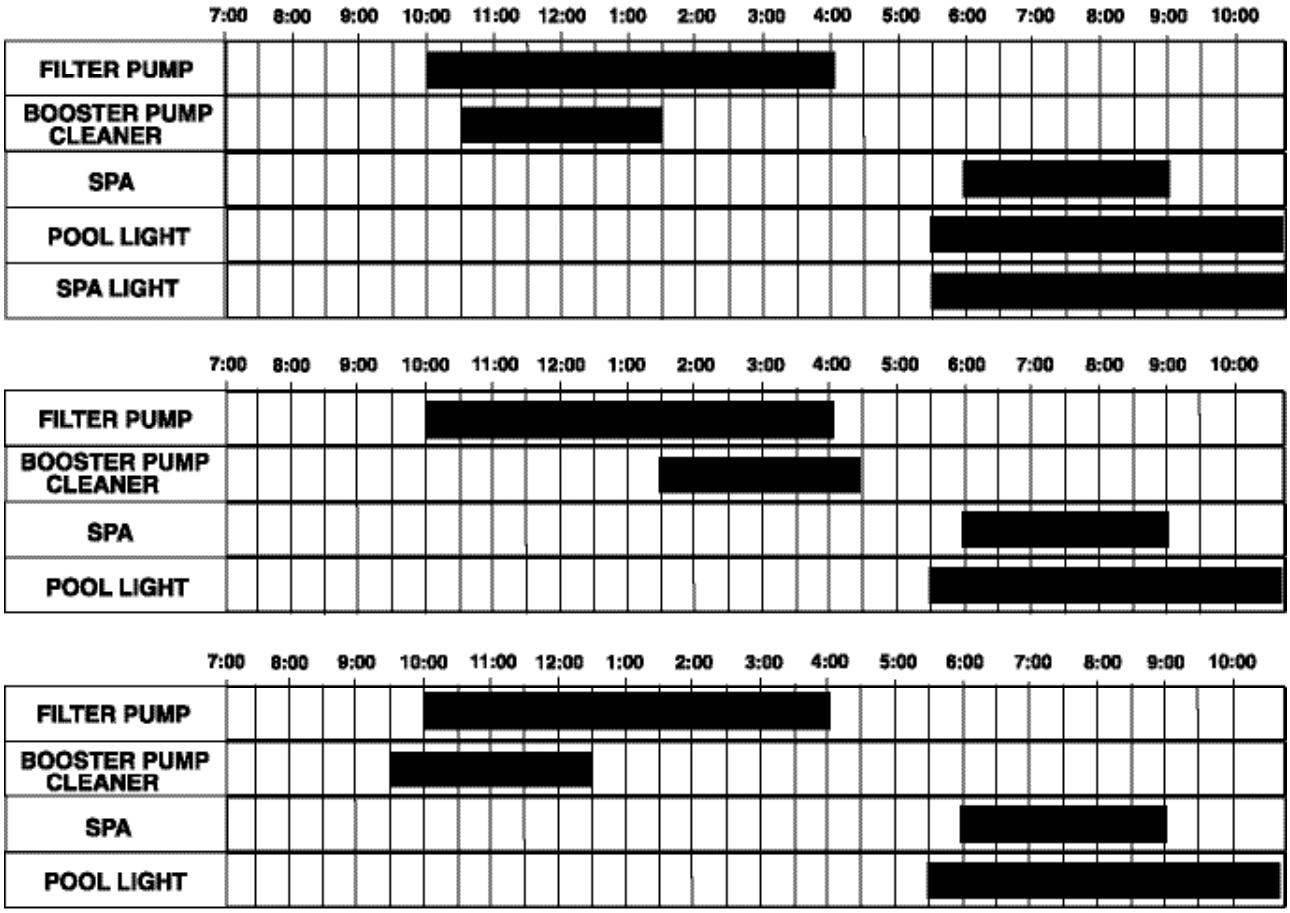
7:00 8:00 9:00 10:00 11:00 12:00 1:00 2:00 3:00 4:00 5:00 6:00 7:00 8:00 9:00 10:00
FILTER PUMP
BOOSTER PUMP CLEANER
SPA
POOL LIGHT
SPA LIGHT
7:00 8:00 9:00 10:00 11:00 12:00 1:00 2:00 3:00 4:00 5:00 6:00 7:00 8:00 9:00 10:00
FILTER PUMP
BOOSTER PUMP CLEANER
SPA
POOL LIGHT
7:00 8:00 9:00 10:00 11:00 12:00 1:00 2:00 3:00 4:00 5:00 6:00 7:00 8:00 9:00 10:00
FILTER PUMP
BOOSTER PUMP CLEANER
SPA
POOL LIGHT

To cancel a schedule: Enter the schedule menu and select the desired piece of equipment to be cancelled. Press buttons 5 or 6 to advance to the appropriate schedule and buttons 1 or 2 to deselect the highlighted selection. Select button 7 to quickly deselect the entire week and cancel the current schedule.

If other equipment schedules need to be cancelled, press buttons 3 or 4 to move through the available equipment and follow the instructions above to cancel the schedule. When this task is complete, press button 8 to return to the program menu.

> **Note:** A schedule becomes active as soon as you press ENTER or progress to another piece of equipment. Once the schedule is accepted, the schedule is compared to the current time and the equipment will turn on if the current time falls between the scheduled start and stop time.

Example: To set the pool filter pump to run from 9:00am to 3:00pm for a 6-hour daily filter cycle:

1. Press and hold the Pool, Spa, or Aux button to access the program menu.
2. Press button 1 of the program menu to select the schedule option.
3. The filter pump schedule will appear first. Press button 1 until the start time hour changes from 12 to 9. Verify that AM is selected.
4. Press button 5 twice to advance the cursor past the minutes to the STOP time hour.
5. Press button 1 until the hour changes to 3 and PM is selected.
6. Press button 7 to select the entire week. Flags will appear under each day of the week. The flags indicate which days of the week the schedule will activate. If no flags are indicated, the schedule will not activate that day.
7. Press button 5 or 6 to scroll through the week days and press button 1 to deselect the desired day. Press button 1 again to reselect the highlighted selection.
8. Press buttons 3 or 4 to scroll through the available equipment schedules and repeat steps 1-7 for desired equipment.
9. When finished, press button 8 to return to the program menu.

5.5 Options

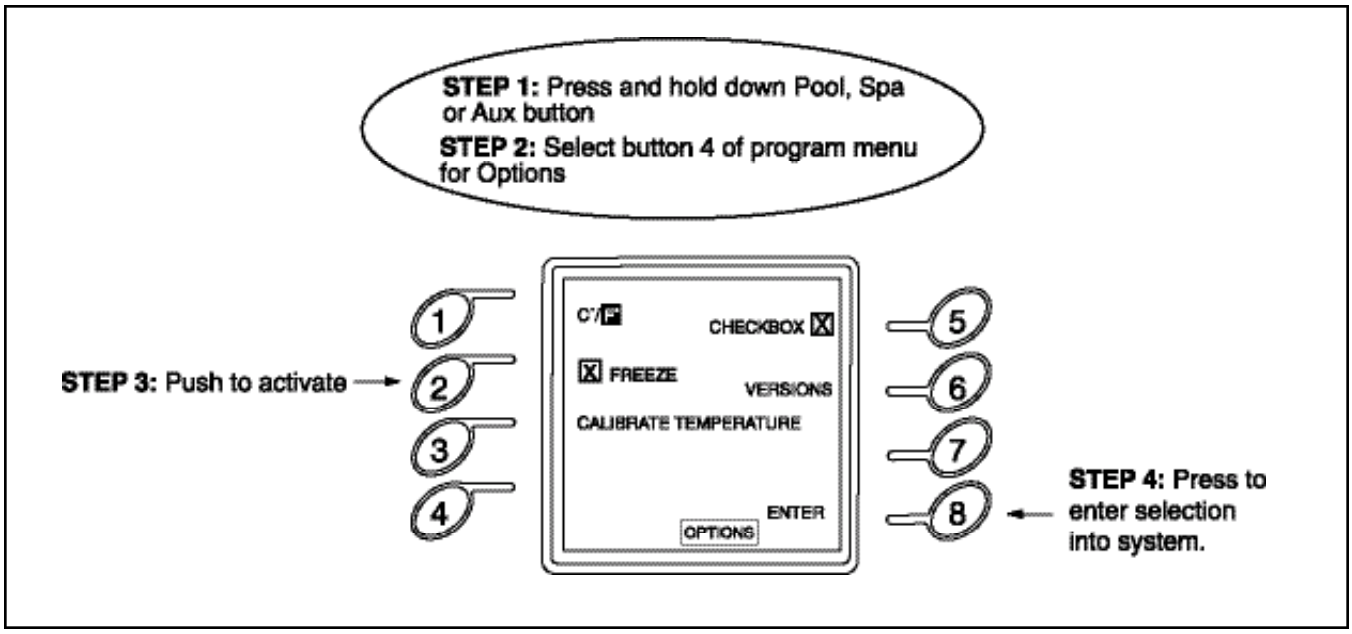
STEP 1: Press and hold down Pool, Spa or Aux button
STEP 2: Select button 4 of program menu for Options
STEP 3: Push to activate
1
2
3
4
C°/F
CHECKBOX
FREEZE
VERSIONS
CALIBRATE TEMPERATURE
ENTER
OPTIONS
5
6
7
8
STEP 4: Press to enter selection into system.

5.5 Options

The OPTIONS menu changes the way the temperature is displayed, assigns freeze protection, calibrates temperature sensors, and review of software revisions as well as check box options.

- Press button 1 to change the temperature from Celsius (°C) to Fahrenheit (°F).
- Press button 2 for freeze protection to be turned ON or OFF.
- Press button 3 to calibrate the temperature sensors. Pressing this button will bring up another menu allowing you to choose to calibrate either the air sensor or the water sensor. Select the sensor you wish to calibrate and you will see another screen similar to the heater thermostat setting. The temperature being displayed between the up and down arrows is the temperature that the controller is currently measuring. To adjust the temperature, use the up and down arrow keys to set the controller to the new temperature. Each time this screen is entered, any previous calibrations are discarded. Press ENTER to return to the PROGRAM menu with the calibration settings stored for future use.

  Note: The temperature sensors are very accurate and are more accurate than most thermometers. Before changing the calibration of the electronic sensor make sure that the temperature you are comparing to is accurate and that a high quality thermometer was used to measure the temperature. In addition, when measuring water temperature make sure that the pump has been circulating the water for at least 30 minutes to allow the sensor time to stabilize.
- Press button 5 to choose an X or a ✔ symbol to indicate active status in the boxes.
- Press button 6 to display the software versions in use on the system. These revisions will be used when speaking with Polaris Customer Service or when upgrading your Sol controller in the future.

Once the selection has been chosen, press button 8 to store in memory and return to the program menu.

5.6 Freeze Protection

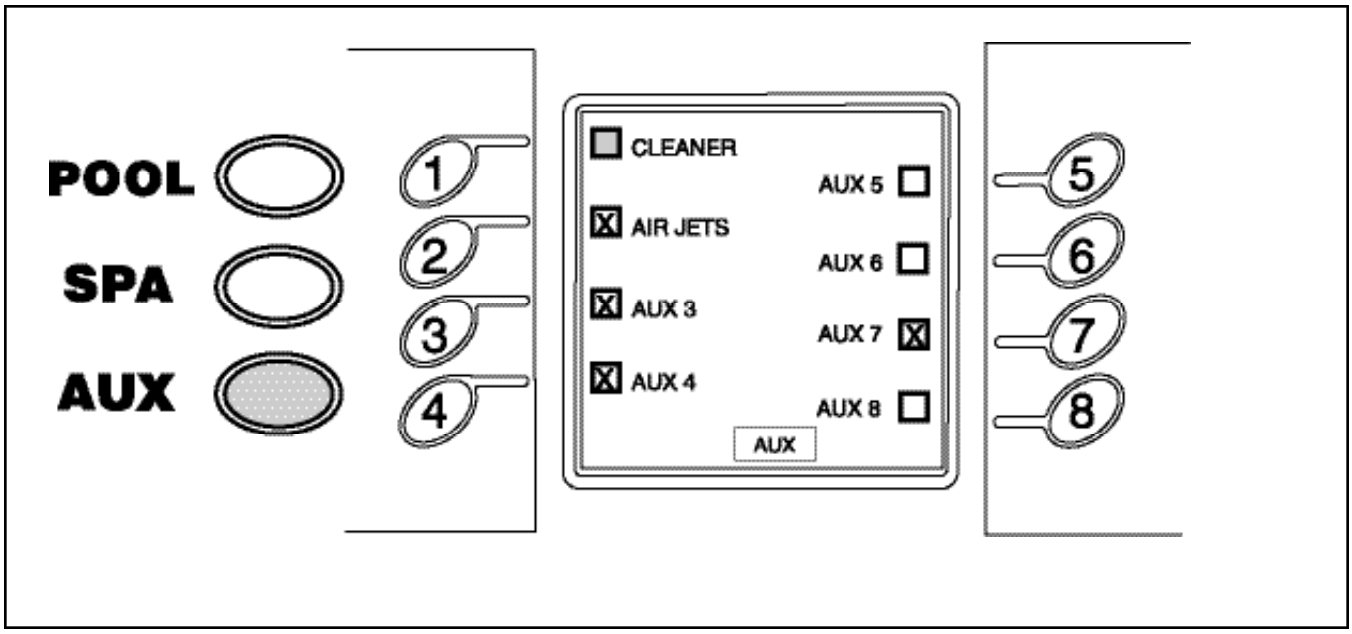

The freeze protection menu can assign freeze protection to the pool and spa equipment. Once assigned, the designated equipment will initiate when the Sol detects freezing conditions. By default, the main filter pump is freeze protected at the factory. The freeze protection temperature is preset to be 38° F and cannot be changed. Typically, items such as the spa jet pump or waterfall pump are assigned freeze protection.

A Command Center DIP switch setting will automatically allow the spa to also be freeze protected. Freeze protecting the spa using the DIP switch will allow the water flow to alternate between the pool and the spa every 30 minutes. When this sequence is initiated, the pool and all other protected auxiliaries will be shut down for the 30 minute period. Once the spa protection sequence is complete, the valves will rotate to the pool position and all selected equipment will become active again. This cycle will repeat until the actual air temperature reaches 38° F.

To assign freeze protection to a specific piece of equipment:

1. Press POOL, SPA, or AUX button to access the Program menu.
2. Press and hold POOL, SPA, or AUX button until the Program menu is displayed. See the Program Menu diagram on page 123.
3. Press button 4 of the program menu to select the Options.
4. Press button 2 to turn on the freeze protection and enter the freeze menu.
5. When activating freeze protection, you can select which auxiliaries to protect. Select each auxiliary from the menu and press Press POOL, SPA, or AUX when complete to store and return to normal operations.

Special Note on Freeze Protection: Freeze protection is intended to protect equipment and plumbing for short freeze periods only. This is accomplished by circulating water so that it will not freeze inside of the equipment or plumbing. **Freeze protection does not guarantee that equipment will not be damaged by extended periods of freezing temperatures.** In these conditions, the pool and spa should be winterized (consult a pool service professional).

5.7 User Modes

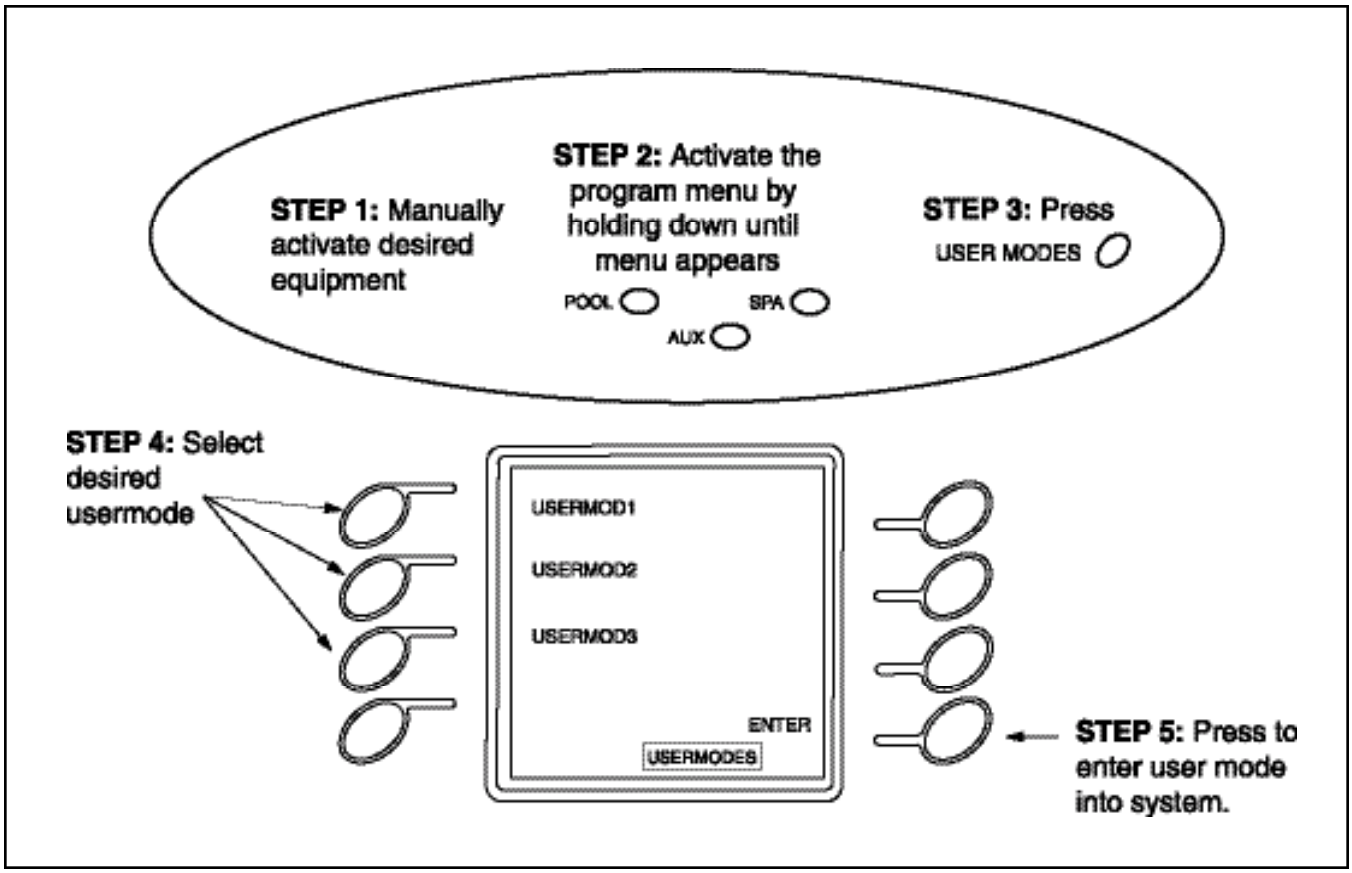

The USER MODES menu allows specific programs to be stored in the Sol 1000 for individual needs. A user mode allows a series of equipment or pool/spa settings to be activated at the touch of a button rather than selecting all of the individual pieces of equipment to turn on. Three user modes are available for programming under the mode OPTION.

Programming

a. Using the remote, turn on the equipment that you would like the USER mode to activate and turn off all equipment you do not want the USER mode to activate. For example, if you want to turn on the pool light, spa light, and landscape light that is hooked up to AUX 6, turn on those items manually from the appropriate menus. Make sure that only the equipment you want to turn on with the user mode is turned on.

b. Activate the Program menu by pressing and holding either POOL, SPA, or AUX until it appears.

c. Select USER MODES.

d. Select the appropriate user mode (1, 2, or 3) that you would like to program.

NOTE: If a user mode is already programmed, selecting it at this point will erase the old program and reprogram it with the current configuration.

You cannot schedule a time for a USER mode to start and stop. A USER mode is used to quickly turn on or off pre-selected equipment from the remote with minimal button presses.

Activating

a. Select the mode button from the POOL menu.

b. Pressing MODE once turns on User Mode 1.

c. Pressing it again turns on User Mode 2, and so on.

Since there are three user modes, you must cycle through the first two in order to activate or turn off the third one, or to turn off the USER modes. For this reason, some thought should be put into what equipment you are turning on and what user mode that equipment is assigned to. Because all safety interlocks will be followed when switching between user modes, certain safety delays may be enabled when progressing from one user mode to the next.

5.7 User Modes

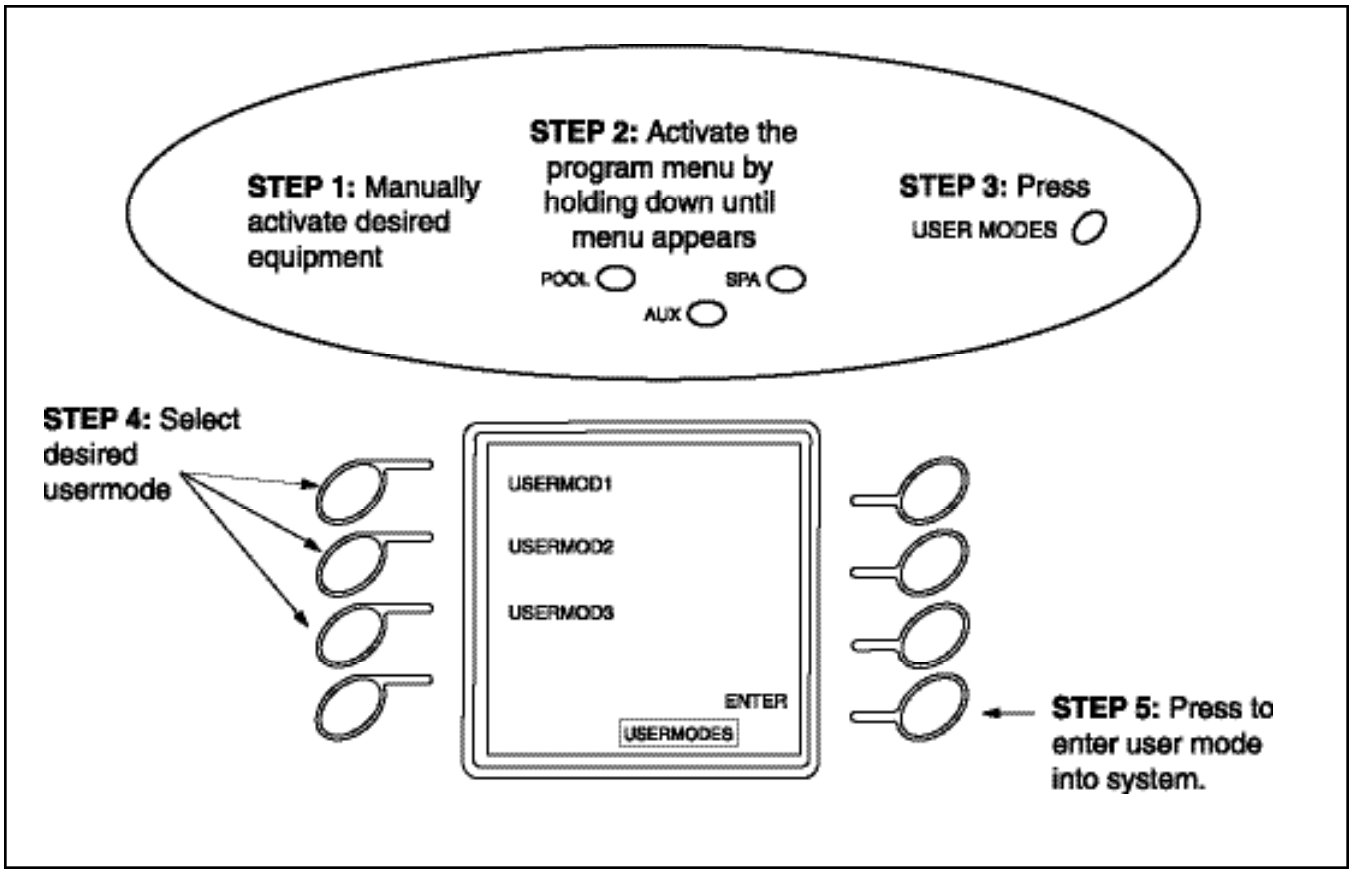

There is a 5 second delay when scrolling through the user modes that will allow you to cycle through the available user modes without actually turning on any equipment. This will allow you to progress from user mode to user mode without having to wait for any safety delay that may have initiated when equipment was turned on. If you remain on a user mode for more than 5 seconds, that mode will initiate and any safety delays will take effect when leaving that user mode. You may have to wait for any safety delays to occur before all of the equipment associated with the chosen user mode becomes active.

Note: If the controller is in a user mode, all existing schedules will be overridden. It is important to exit user modes when complete or the controller will remain in the current mode and ignore any programmed schedules for other equipment. To assure that the controller is not left in a User Mode, the controller will automatically turn User Mode off after 6 hours and all schedules will start again.

6. Troubleshooting

These guidelines will help you troubleshoot problems that may occur with your Sol. If you still have problems after consulting these guidelines, please call Polaris Customer Service 1-800-822-7933.

Symptom: My remote control says “COMMUNICATION COULD NOT BE ESTABLISHED PLEASE TRY AGAIN” on my patio (by my door, in one corner of the property, etc.) but not inside my house even though my patio is closer to the controller than my house.

Fix: This may be an instance where there is a radio “hole” on or near the patio. If the problem is in one general area of the patio then there is really nothing we can do about the problem other than recommend that they not use the remote in that area since range seems to be acceptable in other areas of the property. If the problem is serious enough, we could recommend an auxiliary antenna be installed on the controller to help eliminate the holes. Even though the patio may be closer to the controller than the house, there may be more obstacles in the way interfering with the radio communication than in the house. Again, there isn’t a whole lot that can be done with this situation other than educate the homeowner. If the problem is serious enough, we would recommend that an auxiliary antenna be installed on the system to get an antenna closer to the patio area and improve radio communications.

Symptom: When the power goes out, my controller loses all of my schedules

Fix: Bank 1, DIP switch 8 is in the OFF position. DIP switch 8 is a reset feature. If it is in the off position during a power up condition, all memory will be erased.

Symptom: Whenever the power goes out, my schedules don’t start at the correct time and my clock needs to be re-set.

Fix: The schedules starting at the incorrect times is because the system time is being reset during the power outage. Unlike the memory reset controlled by DIP switch 8, the only reason the clock would reset would be because the battery on the command center circuit board is either dead, not installed, or not installed properly.

Symptom: There is a booster pump cleaner installed on my pool, but I don’t get a cleaner option on my remote anywhere.

Fix: DIP switch 1, Bank 1 is in the off position. This DIP switch tells the controller that there is a booster pump cleaner on the system and automatically places the <CLEANER> option in the POOL menu. In addition, it assigns proper safety logic to the cleaner to assure that it can never run without the pool pump also running.

Symptom: I can’t access the Spa program when I press the button the remote.

Fix: DIP switch 1, Bank 2, must be in the off position.

Symptom: I don’t have a booster pump cleaner on my pool but I have an option for <CLEANER> in my POOL menu.

Fix: DIP switch 1, Bank 1 is in the on position. Turn it to the off position.

Symptom: I have a blower or a jet pump for my spa but I don't get an option to turn on that equipment in the SPA menu

Fix: DIP switch 2, Bank 1 is in the off position. This switch tells the controller that there is a blower or a jet pump installed and places the label in the SPA menu

Symptom: I don't have a blower or jet pump on my spa but I have an <AIR JETS> option in my SPA menu

Fix: DIP switch 2, Bank 1 is in the on position. Turn it to the off position.

Symptom: I have a blower AND a jet pump on my spa but when I turn on the <AIR JETS> only one (either the blower or the jet pump) come on.

Fix: This is how the system is supposed to work. Only one piece of equipment will be connected to the relay controlled by the <AIR JETS> function. The other piece of equipment will be connected to an AUX function and will be available from the AUX menu. If it is desirable (and does not overload the electrical circuit), both pieces of equipment could be connected to the same relay so that they are both controlled by the same button on the remote.

Symptom: The AIR or WATER temp LED (solar as well if there is a solar system installed) on the command center is lit solid.

Fix: Verify proper wiring of the sensor. If the wires are not making proper contact to the terminal block, then the LED will light indicating a sensor failure. If the wires are connected properly, disconnect them from the terminal block and measure the resistance between them. Normal resistance on a good sensor will be 19.9 kΩ at 50°F and 5.5 kΩ at 100° F. If the resistance measures within the range then the sensor is good and the command center circuit board needs to be replaced. If the resistance is not within the range then the sensor has failed and must be replaced.

Symptom: The AIR or WATER temperature on my remote is displayed as –40° F or –40°C

Fix: Verify proper wiring of the sensor. If the wires are not making proper contact to the terminal block, then the LED will light indicating a sensor failure. If the wires are connected properly, disconnect them from the terminal block and measure the resistance between them. Normal resistance on a good sensor will be 19.9 kΩ at 50°F and 5.5 kΩ at 100° F. If the resistance measures within the range then the sensor is good and the command center circuit board needs to be replaced. If the resistance is not within the range then the sensor has failed and must be replaced.

Symptom: The AIR or Water temp LED (solar as well if there is a solar system installed) on the command center is flashing

Fix: Verify proper wiring of the sensor. If the wires are not making proper contact to the terminal block, then the LED will light indicating a sensor failure. If the wires are connected properly, disconnect them from the terminal block and measure the resistance between them. Normal resistance on a good sensor will be 19.9 kΩ at 50°F and 5.5 kΩ at 100° F. If the resistance measures within the range then the sensor is good and the command center circuit board needs to be replaced. If the resistance is not within the range then the sensor has failed and must be replaced.

Symptom: The current Air or Water temp displayed on my remote is nowhere near the actual temperature that should be displayed

Fix: The sensor has most likely failed. Check at the control panel and see if one of the temp LEDs is solid or flashing. If it is, then check the wiring and verify the resistance for the sensor is between 19.9 kΩ at 50°F and 5.5 kΩ at 100° F. If the resistance measures within the range then the sensor is good and the command center circuit board needs to be replaced. If the resistance is not within the range then the sensor has failed and must be replaced.

Symptom: The display on the remote gets hard to see when I take it outside on hot days

Fix: This is a characteristic of displays and cannot be controller. Since the display is a liquid crystal type, the liquid heats up and changes the way it works causing the display to be darker than desired. Don't leave the remote in direct sunlight for prolonged exposure to the high temperatures and take care to leave it in the shade or to cover it up when using it outside. It is possible to permanently damage the display if it is left exposed to high temperatures for extended periods. Usually the remote will "recover" after exposure but under prolonged exposure the liquid will be permanently damaged.

Symptom: There are landscape lights connected to the low voltage auxiliary and they are on when the check box is cleared and off when the check box is checked

Fix: They are incorrectly wired to the normally closed side of the relay output. There are two ways to wire the auxiliary. To the normally open side (will turn on when the box is checked and off when it is cleared) or to the normally closed side (will turn off when the box is checked and on when the box is cleared). Rewire the output so that it is connected to the normally open side.

Symptom: On cold nights, my filter pump comes on even though the schedule is not set to do so.

Fix: Freeze protection is enabled and the temperature is low enough to cause the controller to turn on the equipment to prevent freezing of the lines. If you want to maintain the freeze protection, do nothing. If you don't want the pool equipment protected from freezing, enter the options menu and disable the freeze protection option.

Symptom: When training a remote control, I keep getting a message that says "COMMUNICATION COULD NOT BE ESTABLISHED. PLEASE TRY AGAIN"

Fix: The training operation is not being initiated correctly. "COMMUNICATION COULD NOT BE ESTABLISHED. PLEASE TRY AGAIN" will only be displayed when pressing the POOL, SPA, or AUX buttons. When training the remote, be sure to press the button above and to the right of the POOL button FIRST, and while pressing this button also press the POOL button. This will initiate the training routing which will display the message stating "REQUESTING SYSTEM ID"

Symptom: When training the remote, the message “REQUESTING SYSTEM ID…….” Appears, but the remote never begins a count as the manual says

Fix: Check to make sure the controller is in TIME OUT mode. If it is not, then put it in TIME OUT mode and try again. If it already is, verify that the antenna and the antenna connector on the circuit board are tightly secured and try again. If the training still fails, try to train the charger. If the charger trains properly then the remote is most likely damaged and needs to be replaced. If the charger also does not train properly, then the command center needs to be replaced.

Symptom: When I enable the solar function, I don’t notice anything happen

Fix: Solar heating will only be active when the filter pump is supposed to be running. The controller will not turn the pump on automatically but wait until the pump is running to decide if water should be diverted to the solar collectors for solar heating.

Symptom: The heater never turns off (or never turns on)

Fix: 1) Verify proper wiring of heater to controller
2) Verify proper wiring of the heater control wires to the controller
3) If the heater never turns on, verify that the heater power switch is turned to the ON position.
4) Remove the wires from the heater terminal block and wire nut them together.
5) Verify that the heater functions properly in this configuration. If it does, the proceed to the following steps. If the heater still doesn’t work, then the heater is not functioning properly. Consult the owner’s manual for the heater or contact a service technician for that brand of heater.

To perform the following troubleshooting steps, you must have a multi-meter with an ohm-meter selection

6) When the controller says that the heater is off (no check mark on the remote and no LED lit on the command center) but the heater is on, measure with the meter across the heater terminals on the circuit board to see if there is a current path between the two terminals. IF there isn’t, then the relay contacts are open as they should be. Proceed to step 6. If there is a current path, then the relay controlling the heater is faulty and the command center board must be replaced.
7) Using the remote control, turn the heater on and adjust the temperature so that the controller will tell the heater to fire. Using the multi-meter, check the current path across the heater terminals again. Because the heater is supposed to be firing, there should now be a current path between the terminals. If there is, then the board is functioning properly and the problem lies solely with the heater. If there still is no current path, then the relay on the board is faulty and the board must be replaced.

Symptom: There are several schedules in my controller but they never seem to activate.

Fix: 1. Check to make sure that the days of the week are selected for the schedules that are programmed. There may be a valid start and stop time in the schedule, but if no days are selected the schedule(s) will never initiate.

2. Verify under the POOL mode that the selection for USERMODE is set to OFF. If the controller is in an active USERMODE, all schedules will be overridden during the time that the controller is in that USERMODE. Toggle through the available USERMODES until you reach the OFF selection and your schedules will initiate at their desired start time.

Symptom: When I turn on a desired piece of equipment, a different piece of equipment turns on.

Fix: The relays controlling the equipment are connected to the incorrect output on the circuit board. Verify proper connections from each relay to the PCB for proper operation.

Symptom: One of my pieces of equipment won't turn on even though the remote and the control panel show that it should be on.

Fix: 1. Verify that the relay controlling the desired piece of equipment is connected to the proper location on the PCB. If the equipment is not connected to the proper location on the PCB, it obviously won't be turning on or off when the button is pressed.
2. Make sure that the piece of equipment in question is on as far as the controller is concerned (LED on control panel lit)
3. Use voltmeter to measure the voltage on the input side of the relay.
   a. Voltmeter measures 24 VAC –
      i. Measure output voltage between Line1 and Line 2 or between line 1 and ground on relay
      ii. Meter measures 120 VAC – problem with equipment wiring or other problem with equipment. Controller functioning normally.
      iii. Meter does not display any voltage – bad relay. Replace relay.
   b. Voltmeter does not measure any voltage
      i. Remove relay wire connector from circuit board and measure voltage at the two pins on the circuit board. DO NOT LET THE PROBES FROM THE VOLT METER TOUCH ONE ANOTHER!
         • Voltmeter now measures 24 VAC – problem was the relay wire assembly. Replace wire assembly
         • Voltmeter still does not measure any voltage – problem with circuit board. Entire PCB must be replaced.

Symptom: A piece of equipment won't turn off even thought the remote and controller say it should be off.

Fix: 1. Verify that the relay controlling the desired piece of equipment is connected to the proper location on the PCB. If the equipment is not connected to the proper location on the PCB, it obviously won't be turning on or off when the button is pressed.
2. At the controller, enter service mode. This will automatically shut off all equipment that may be running.
   a. If the piece of equipment is still running even after entering service mode, unplug the high power relay from the circuit board.
      Still running? Relay is bad and should be replaced
      Not running? Circuit board is bad and should be replaced

Symptom: My heater won't turn off regardless of what the water temperature actually is

Fix: Disconnect heater wires from PCB. If heater still is on, problem is with the heater and heater wiring. If heater turns off, problem is on the PCB and entire PCB must be replaced.

Symptom: One of the valve actuators only turns in one direction and never reverses

Fix: Switch the suction and return valve connections on the circuit board. Go back and forth between pool and spa mode to force the valves to move in both directions. Does the valve in question now rotate properly in both directions while the valve that is known to work only function in one direction? If so then the valve output is faulty on the board and the board must be replaced. If the questionable valve still only rotates in one direction, then the problem is with the valve actuator and it must be replaced. Replace the actuator connectors to the appropriate output connections.

Symptom: The range of my remote doesn't seem to be as good as the 150 foot claim.

Fix: Check to make sure the antenna and antenna cable connections are tight. If they are, remove the antenna cable from the circuit board and remove the antenna from the top of the enclosure. Take the antenna and screw it directly into the circuit board. If performance improves, then the antenna cable needs to be replaced. If it is not improved, then obtain a new antenna and try the same thing. If there is still no improvement, then the circuit board may be faulty and need replacement. However, there are a number of factors that can affect the range of the radio communications as previously outlined. Any of them alone or in combination with others can severely decrease the range of communication. If the geography of the installation is such that the controller will inherently have bad reception, then an auxiliary antenna can be added to the system or the charger could be hard wired to the controller. Doing either of these things will essentially increase the range of communications by adding a second (or third) antenna to the system.

Symptom: The message "Replace the remote battery" is displayed on the remote

Fix: Replace the remote battery and "o" ring.

Symptom: The message "Replace the Back-Up Battery" is displayed on the remote.

Fix: Replace the Back-Up Battery.

Symptom: After setting a schedule, the piece of equipment won't run any days.

Fix: Push the All Days button to show arrows under each day of the week.

Limited Warranty
Polaris Sol 1000 Wireless Automated Control System

This limited warranty is extended to the original consumer purchaser of this Polaris Sol Control System (the "System") manufactured by Polaris Pool Systems, Inc., 2620 Commerce Way, Vista, California 92083-8438, U.S.A.

Polaris warrants the System, including all parts and, components thereof, to be free of defects in material and workmanship. This limited warranty applies only to Systems which have been installed and maintained in strict accordance with the installation and operating instructions provided by Polaris, for its intended use with personal or single-family pools (commercial use is excluded), using installation hardware supplied and/or recommended in writing by Polaris, and to Systems which have been connected to the correct voltage supply. The instruction manual should be read in its entirety before the installation of the Polaris Sol Control System. Failure to follow the installation instructions may void this warranty. If you have any questions regarding your Polaris Sol Control System, please feel free to call or write us. Be sure to include the serial number of your unit.

The Polaris Sol Control System is warranted for parts and labor for a period of one year from the date of manufacture of the unit as established by the serial number, or one year from the date of purchase of the Polaris Sol Control System with proof of purchase, whichever is later.

This limited warranty does not apply if the failure is caused or contributed to by improper installation, handling, set up adjustments, usage, operation, storage, or maintenance. This limited warranty does not apply if the failure is caused or contributed to by a connection to improper voltage supply, power failure or reduction, signal interference problems, unsuitable application of the System, lack of reasonable and necessary maintenance, damage in transit or during installation, or damage from repairs/alterations/removal made or attempted by anyone other than Polaris or one of its Authorized Service Centers. This limited warranty does not cover cosmetic damage or damage due to acts of God, water, wind, rain, lightning, freezing, rodents or insects, accident, misuse, abuse, negligence, or modification of or to any part of the Polaris Sol Control System. This warranty does not cover consumables (such as fuses or batteries). These are normal replacement items.

Polaris will repair or replace, at its option, the System or part and component thereof proven to be defective within the warranty period and under the conditions of the warranty. In order to make a claim under this warranty, the consumer must contact the Customer Service Department at 1-800-VAC-SWEEP (USA and Canada only) or (760) 599-9600 with your serial number and proof of purchase.

REPAIR OR REPLACEMENT AS PROVIDED UNDER THIS LIMITED WARRANTY IS THE EXCLUSIVE REMEDY OF THE CONSUMER. THIS LIMITED WARRANTY IS IN LIEU OF ALL OTHER WARRANTIES, EXPRESS OR IMPLIED, INCLUDING THE IMPLIED WARRANTIES OF MERCHANTABILITY AND FITNESS FOR A PARTICULAR PURPOSE AND ALL SUCH OTHER WARRANTIES ARE DISCLAIMED EXCEPT TO THE EXTENT ANY IMPLIED WARRANTY MAY BE IMPOSED BY STATE CONSUMER LAW. ANY SUCH IMPLIED WARRANTY IMPOSED BY STATE CONSUMER LAW IS LIMITED IN DURATION TO ONE (1) YEAR FROM THE DATE OF PURCHASE.

IN NO EVENT SHALL POLARIS BE LIABLE FOR INCIDENTAL OR CONSEQUENTIAL DAMAGES OF ANY NATURE OR KIND OR FOR DAMAGES TO PERSONS OR PROPERTY, INCLUDING ANY DAMAGES RESULTING FROM THE FAILURE OF OR DEFECT IN ANY EQUIPMENT USED IN CONJUNCTION WITH THE POLARIS SOL CONTROL SYSTEM (E.G., PUMPS, FILTERS, BLOWERS, HEATERS, POOL CLEANERS, LIGHTING, WATER FEATURES, VALVES) OR IN USE WITH A SUBSTANDARD POOL CIRCULATION SYSTEM.

Some states do not allow limitation on how long an implied warranty lasts, or the exclusion or limitation of incidental or consequential damages, so the above limitations may not apply to you.

This limited warranty is valid only in the United States of America and Canada, and it does not apply to Polaris Sol Control Systems sold or installed in any other country.

Polaris

Your pool. Our reputation.

USA: 2620 Commerce Way, Vista, CA 92083-8438 • 760-599-9600 • 1-800-VAC-SWEEP (USA and Canada only)
Florida Warehouse: 10453 Tillery Road, Spring Hill, FL 34608
Australia: Unit 16, 1-7 Short Street, Chatswood, NSW 2067 • 02-9882-1111 • ACN 080 168 092
Europe: C/Osona s/n. (Pol. Ind. El Ramassar), 08520 Les Franqueses del Vallés, Barcelona, Spain • +34 93 840 25 85

www.polarispool.com